4 Chassis

4.1 Chassis Overview

The S series fixed Ethernet switches integrate the access and transmission functions to provide reliable access/aggregation and high-quality transmission of services on enterprise networks. The switches are built on an integrated hardware platform, and the hardware system consists of the chassis, power module, fan module, extended cards, and Switch Control Unit (SCU).

The S series fixed Ethernet switches are available in a variety of models for you to choose based on your network requirements.

The S6700 series includes the S6720-LI, S6720S-LI, S6720-SI, S6720S-SI, S6700-EI, S6720-EI, S6720S-EI, S6720-HI, S6730-S, S6730S-S, S6730S-H, and S6730-H subseries. The S6720-LI and S6720S-LI switches are Layer 2 switches, and all the other models in this series are Layer 3 switches.

4.2 Naming Conventions

Figure 4-1 S6700 switch naming conventions (applicable to S6730 models)

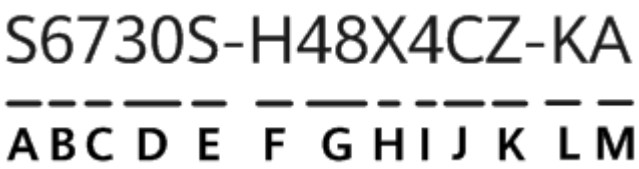

NOTE

The device names in this figure are used as examples and do not represent specific devices.

The uplink and downlink ports mentioned in this document refer to the recommended usage of the port, and do not indicate that the corresponding port can be used only for the downlink or uplink.

Table 4-1 S6700 switch naming convention description (applicable to S6730 models)

Identifier	Description
A	Product type (1 character) The value is fixed at S, indicating that the device is an S series switch.
B	Role on the network (1 character) ● **6**: aggregation switch ● **5**: access switch
C	Market positioning (1 character) **7**: Enterprise series switch
D	Product sub-series (2 characters) The left character indicates the generation, for example, S6720 and S6730. The right character is reserved.
E	Industry identifier (0 to 2 characters) ● By default, this field is left empty. ● **S**: channel distribution model

Identifier	Description
F	Level type (1 character) • **H**: high-level • **S**: standard
G	Number of downlink ports (1 or 2 characters)
H	Downlink port type (1 character) • **T**: GE electrical port • **P**: GE electrical port, supporting PoE+ • **X**: 10GE optical port • **Y**: 25GE optical port
I	Number of uplink ports (1 character)
J	Uplink port type (1 character) • **S**: GE optical port • **X**: 10GE optical port • **C**: 100GE optical port • **Q**: 40GE optical port • **Y**: 25GE optical port
K	Support for pluggable cards (0 or 1 character) • Empty: The switch does not support pluggable cards. • **Z**: The switch supports pluggable cards.
L	Special function type (0 or 2 characters) • **V2 or TV2**: If the same series of models use different software platforms, this field is used to differentiate them.
M	Power module type (0 to 2 characters) • Empty: The switch uses pluggable power modules. • **A**: The switches are sold with AC power module. • **D**: The switches are sold with DC power module.

Figure 4-2 S6700 switch naming conventions (applicable to S6700/S6720 models)

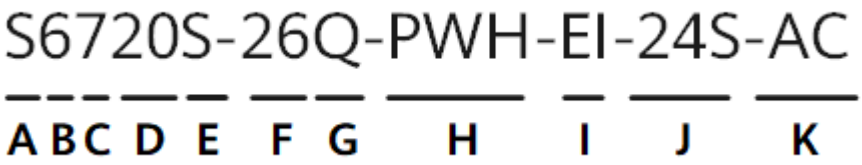

NOTE

The device names in this figure are used as examples and do not represent specific devices.

The uplink and downlink ports mentioned in this document refer to the recommended usage of the port, and do not indicate that the corresponding port can be used only for the downlink or uplink.

Table 4-2 S6700 switch naming convention description (applicable to S6700/S6720 models)

Identifier	Description
A	Switch
B	• **6**: 10GE downlink ports • **5**: GE downlink ports • **3**: Layer 3 switch with 100M downlink ports • **2**: Layer 2 switch with 100M downlink ports
C	**7**: Enterprise series switch
D	Product sub-series (such as 00 or 10)
E	S: channel distribution model
F	Maximum number of ports
G	Uplink port type: • **C**: The product supports pluggable cards and its uplink ports are provided by a pluggable card or are fixed QSFP+ ports. • **Q**: Uplink ports of the product are fixed QSFP+ ports. • **X**: The product has fixed 10GE uplink ports. • **L**: Uplink ports of the product are 100GE QSFP28 ports. **NOTE** If the product name does not contain this field, the switch has no uplink port.
H	**PWH**: The product supports PoE++. **NOTE** If the product name does not contain this field, the switch does not support PoE.
I	Level type: • **LI**: lightweight edition • **SI**: standard edition • **EI**: enhanced edition • **HI**: high-end edition, which supports high-performance operation, administration, and maintenance (OAM) and built-in real-time clock (RTC)

Identifier	Description
J	Downlink port type: ● 24S: 24 downlink SFP+ optical ports ● 48S: 48 downlink SFP+ optical ports
K	Power supply type: ● **AC**: switch using alternating current power supply ● **DC**: switch using direct current power supply **NOTE** If S6720-EI, S6720-SI, and S6720S-SI switches are sold with pluggable AC or DC power modules in standard configuration, their product model names contain "-AC" or "-DC." However, the silkscreens and nameplates on the switches do not contain "-AC" or "-DC."

4.3 Port Numbering Conventions

Physical ports are numbered in the following way:

A single switch uses slot ID/subcard ID/port sequence number to identify physical ports.

- Slot ID: indicates the slot where the switch is located. The value is 0.
- Subcard ID: indicates the ID of a subcard.
- Port sequence number: indicates the sequence number of a port on the switch.

A stacked switch uses stack ID/subcard ID/port sequence number to identify physical ports.

- Stack ID: indicates the ID of a stacked switch. The value ranges from 0 to 8.
- Subcard ID: indicates the ID of a subcard.
- Port sequence number: indicates the sequence number of a port on the switch.

Table 4-3 Port numbering conventions

Port Numbering Diagram	Description
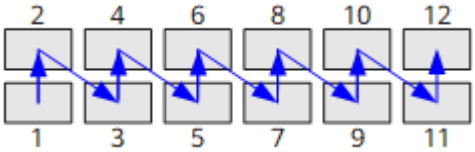	There are two rows of service ports on the device. These ports are numbered from bottom to top and left to right, starting from 1. For example, the port on the top left is numbered 0/0/2. Ports of different speeds are numbered separately. For example, the first 100M port is numbered Ethernet 0/0/1, the first GE port is numbered GigabitEthernet 0/0/1, the first 10GE port is numbered XGigabitEthernet 0/0/1, and the first 40GE port is numbered 40GE 0/0/1. Ports with the same rate are numbered in ascending order.

4.4 S6700-EI

4.4.1 S6700-24-EI

Version Mapping

Table 4-4 lists the mapping between the S6700-24-EI and software versions.

Table 4-4 Version mapping

Series	Model	Software Version
S6700-EI	S6700-24-EI	V100R006C00 to V200R005C02

Appearance and Structure

Figure 4-3 S6700-24-EI appearance

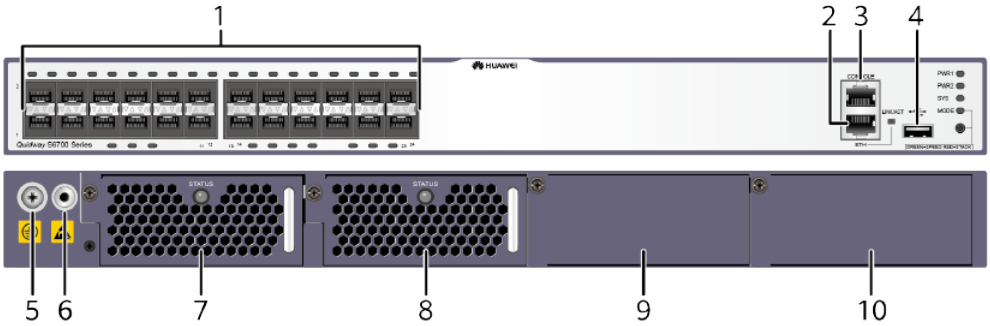

1	Twenty-four 10GE SFP+ ports Applicable modules and cables: • **GE optical module** • **GE-CWDM optical module** • **GE copper module (applicable in V200R001C01 and later versions, only 1000 Mbit/s supported)** • **10GE SFP+ optical module** • **10GE-CWDM optical module (applicable in V200R005C00 and later versions)** • **1 m and 3 m SFP+ high-speed copper cables** • **5 m SFP+ high-speed copper cables (applicable in V200R005C02)** • **10 m SFP+ high-speed copper cable (applicable in V200R001C00 and later versions)** • **3 m and 10 m AOC cables (applicable in V200R003C00 and later versions)**	2	One ETH management port
3	One console port	4	One USB port

5	Ground screw **NOTE** It is used with a **ground cable**.	6	ESD jack **NOTE** Before installing or maintaining a switch, wear an ESD wrist strap and insert the other end of the ESD wrist strap into this ESD jack.
7	Fan slot 2 **NOTE** Applicable fan module: **CX7E1FANA fan module**	8	Fan slot 1 **NOTE** Applicable fan module: **CX7E1FANA fan module**
9	Power module slot 2 **NOTE** • **500 W AC power module** • **500 W DC power module**	10	Power module slot 1 **NOTE** • **500 W AC power module** • **500 W DC power module**

Port Description

10GE SFP+ port

A 10GE SFP+ Ethernet optical port supports auto-sensing to 1000 Mbit/s. It sends and receives service data at 1000 Mbit/s or 10 Gbit/s. **Table 4-5** describes the attributes of a 10GE SFP+ Ethernet optical port.

Table 4-5 Attributes of a 10GE SFP+ port

Attribute	Description
Connector type	LC/PC
Optical port attributes	Depend on the optical module used
Standards compliance	IEEE802.3ae
Working mode	GE/10GE auto-sensing

Console port

The console port is connected to a console for on-site configuration. The port must use a **console cable**. The console port is used when a switch is powered on for the first time. For details about the attributes of a console port, see **Table 4-6**.

Table 4-6 Attributes of a console port

Attribute	Description
Connector type	RJ45
Standards compliance	RS-232
Working mode	Duplex Universal Asynchronous Receiver/Transmitter (UART)
Baud rate	9600 bit/s, 19200 bit/s, 38400 bit/s, 57600 bit/s, or 115200 bit/s Default value: 9600 bit/s

ETH management port

You can connect a switch to a configuration terminal or network management workstation through the ETH management port to configure the switch locally or remotely. The port must use an **Ethernet cable**. You can choose to download the software package through the ETH management port in the BootROM menu. File transfer through the ETH management port is faster than transfer through the console port. For details on how to use the ETH management port, see the *Configuration Guide - Basic Configurations*. **Table 4-7** describes the attributes of an ETH management port.

Table 4-7 Attributes of an ETH management port

Attribute	Description
Connector type	RJ45
Standards compliance	IEEE802.3
Working mode	10/100 Mbit/s auto-sensing
Maximum transmission distance	100 m

USB port

The USB port can have a USB flash drive connected to upgrade the switch, or transfer configuration files or other files. The USB port can only connect to a USB flash drive that complies with USB 2.0.

NOTE

USB flash drives from different vendors differ in model compatibility and drivers. If a USB flash drive cannot be used, try to replace it with another one from a mainstream vendor. Switches support a maximum of 128 GB USB flash drives.

Indicator Description

Figure 4-4 Indicators on the S6700-24-EI

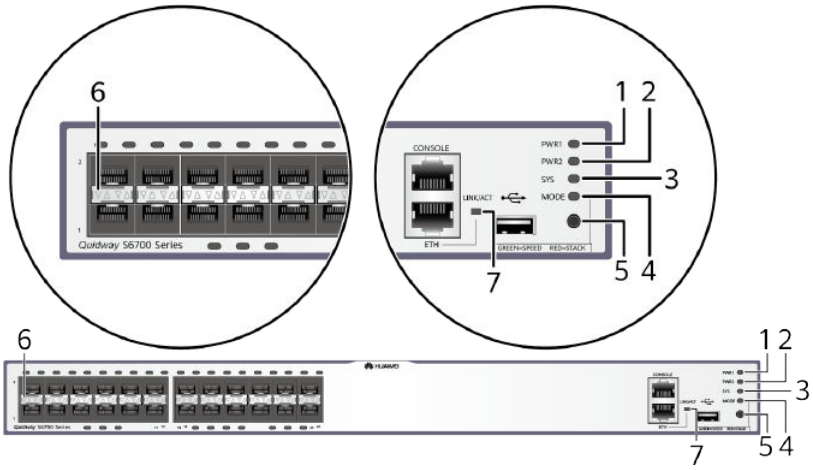

Table 4-8 Description of indicators on the switch

Number	Indicator/ Button	Color	Description
1	PWR1: power supply indicator	-	Off: No power module is available in power module slot 1, or the switch has only one power module but the power module does not work normally.
		Green	Steady on: A power module is installed in power module slot 1 and is working normally.
		Red	Steady on: The switch has two power modules installed. Any of the following situations occurs in power module slot 1: ● A power module is available in this slot but its power switch is in the OFF position. ● A power module is available in this slot but it is not connected to a power source. ● The power module in power module slot 1 fails.

Number	Indicator/ Button	Color	Description
2	PWR2: power supply indicator	-	Off: No power module is available in power module slot 2, or the switch has only one power module but the power module does not work normally.
		Green	Steady on: A power module is installed in power module slot 2 and is working normally.
		Red	Steady on: The switch has two power modules installed. Any of the following situations occurs in power module slot 2: ● A power module is available in this slot but its power switch is in the OFF position. ● A power module is available in this slot but it is not connected to a power source. ● The power module in power module slot 2 fails.
3	SYS: system status indicator	-	Off: The system is not running.
		Green	Indicator states and meaning in V100R006 version: ● Steady on: The system is not operating properly or is starting. ● Slow blinking: The system is operating properly. ● Fast blinking: The system is copying the system software and configuration file from a USB flash drive. Indicator states and meaning in V200R001 and later versions: ● Fast blinking: The system is starting or is copying the system software and configuration file from a USB flash drive during a USB-based upgrade. ● Slow blinking: The system is running normally.

Number	Indicator/ Button	Color	Description
		Yellow	● Steady on: The system is performing self-check during startup (only applicable to V100R006). ● Blinking: The system has been successfully upgraded using a USB flash drive and the switch has restarted. You can remove the USB flash drive from the switch.
		Red	● Steady on: The system does not work normally after registration, or a fan or temperature alarm has been generated. ● Blinking: An error occurred during USB-based upgrade and the system failed to be upgraded after a USB flash drive is inserted.
4	MODE: mode indicator	-	Off: The service port indicators are in the status mode (default). In the status mode, the service port indicator shows the port link or activity state.
		Green	Steady on: The service port indicators show the port speed. After 45 seconds, the service port indicators automatically restore to the status mode.
		Red	Steady on: The service port indicators show the stack ID of the switch. After 45 seconds, the service port indicators automatically restore to the status mode.

Number	Indicator/ Button	Color	Description
5	Mode switch button	-	• When you press this button once, the mode indicator turns green and the service port indicators show the speed of each service port. • When you press this button a second time, the mode indicator turns red and the service port indicators show the stack status. • When you press this button a third time, the mode indicator turns off. If you do not press the button within 45 seconds, the mode indicator restores to status mode.
6	Service port indicator	Meanings of service port indicators vary in different modes. For details, see **Table 4-9**.	
7	ETH indicator	Green	• Off: No link is established on the port. • Steady on: The port is connected. • Blinking: The port is sending or receiving data.

Table 4-9 Description of service port indicators in different modes

Display Mode	Color	Description
Status	-	Off: The port is not connected or has been shut down.
	Green	Steady on: The port is connected.
	Yellow	Blinking: The interface is sending or receiving data.
Speed	Green and yellow	• Off: The port is not connected or has been shut down. • Both steady on: The port is operating at a speed of 1000 Mbit/s. • Both blinking: The port is operating at a speed of 10 Gbit/s.

Display Mode	Color	Description
Stack	Green and yellow	• Off: Port indicators do not show the stack ID of the switch. • If both indicators are steady on, the switch is not a master switch: – If the indicator of a port is steady on, the number of this port is the stack ID of the switch. – If the first nine port indicators of the switch are steady on, the stack ID of the switch is 0. • If both indicators are blinking, the switch is a master switch: – If the indicator of a port is blinking, the number of this port is the stack ID of the switch. – If the first nine port indicators of the switch are blinking, the stack ID of the switch is 0.

Power Supply Configuration

The S6700-24-EI can use a single power module or double power modules for 1+1 power redundancy. In versions prior to V200R005C00, the switch cannot use AC and DC power modules simultaneously. In V200R005C00 and later versions, the switch support mixing of AC and DC power modules.

Figure 4-5 shows the power supply connections of dual DC power modules. After DC power is transmitted to the PWR module, the PWR module provides -53 V output voltage, and the motherboard provides power for the entire device.

Figure 4-5 Power supply connections of dual DC power modules

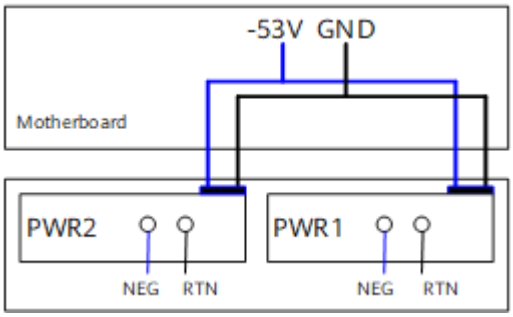

NEG: Negative wire RTN: Positive wire GND: -53 V reference ground

Figure 4-6 shows the power supply connections of dual AC power modules. After AC power is transmitted to the PWR module, the PWR module provides -53 V output voltage, and the motherboard provides power for the entire device.

Figure 4-6 Power supply connections of dual AC power modules

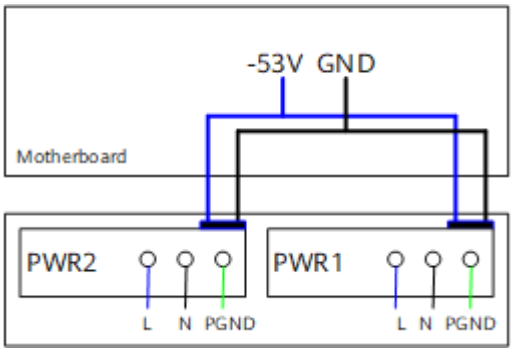

L: Live wire N: Neutral wire PGND: Protection ground wire GND: -53 V reference ground

Heat Dissipation

The S6700-24-EI uses pluggable fan modules for forced air cooling. Air flows in from the left and right sides, and exhausts from the rear panel.

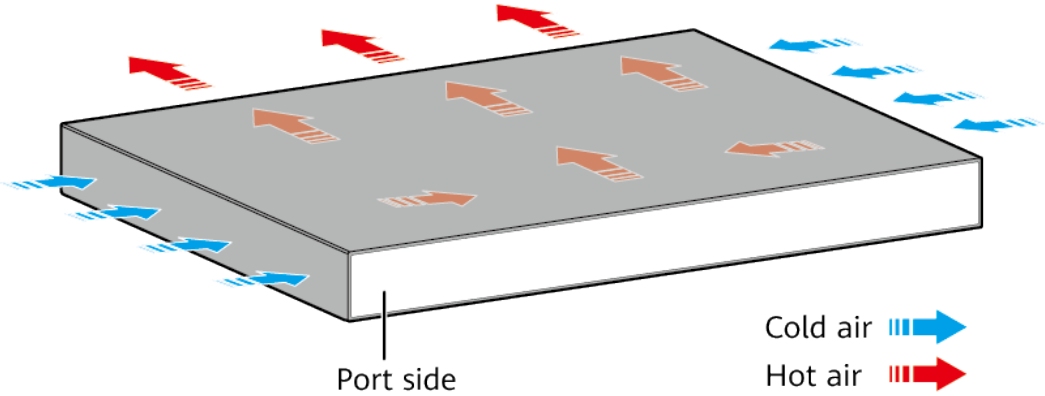

NOTE

This figure only shows the airflow direction and does not depict the actual device.

Technical Specifications

Table 4-10 lists technical specifications of the S6700-24-EI.

Table 4-10 Technical specifications

Item	Description
Memory (RAM)	512 MB

Item	Description
Flash	64 MB
Mean time between failures (MTBF)	34.54 years
Mean time to repair (MTTR)	2 hours
Availability	> 0.99999
Service port surge protection	NA
Power supply surge protection	● Using AC power modules: ±2 kV in differential mode, ±4 kV in common mode ● Using DC power modules: ±1 kV in differential mode, ±2 kV in common mode
Dimensions (H x W x D)	43.6 mm x 442.0 mm x 420.0 mm (1.72 in. x 17.4 in. x 16.5 in.)
Weight	● Empty: ≤ 5 kg (11.02 lb) ● Fully configured: ≤ 8.5 kg (18.74 lb)
Stack ports	Any 10GE SFP+ ports (a maximum of eight physical ports)
RPS	Not supported
PoE	Not supported
Rated voltage range	100 V AC to 240 V AC, 50/60 Hz -48 V DC to -60 V DC
Maximum voltage range	90 V AC to 264 V AC, 47 Hz to 63 Hz -38.4 V DC to -72 V DC
Maximum power consumption (100% throughput, full speed of fans)	153.6 W
Operating temperature	-5°C to +50°C (23°F to 122°F) at an altitude of 0-1800 m (0-5906 ft.) **NOTE** ● The operating temperature of the switch is -5°C to +45°C (23°F to 113°F) when it uses SFP+ optical modules with 40 km or longer transmission distances. ● When the altitude is 1800-5000 m (5906-16404 ft.), the highest operating temperature reduces by 1°C (1.8°F) every time the altitude increases by 220 m (722 ft.).

Item	Description
Storage temperature	-40°C to +70°C (-40°F to +158°F)
Noise under normal temperature (27°C, sound power)	< 55 dB(A)
Relative humidity	5% to 95%, noncondensing
Operating altitude	0-5000 m (0-16404 ft.)
Certification	• EMC certification • Safety certification • Manufacturing certification
Part number	02352768

4.4.2 S6700-48-EI

Version Mapping

Table 4-11 lists the mapping between the S6700-48-EI and software versions.

Table 4-11 Version mapping

Series	Model	Software Version
S6700-EI	S6700-48-EI	V100R006C00 to V200R005C02

Appearance and Structure

Figure 4-7 S6700-48-EI appearance

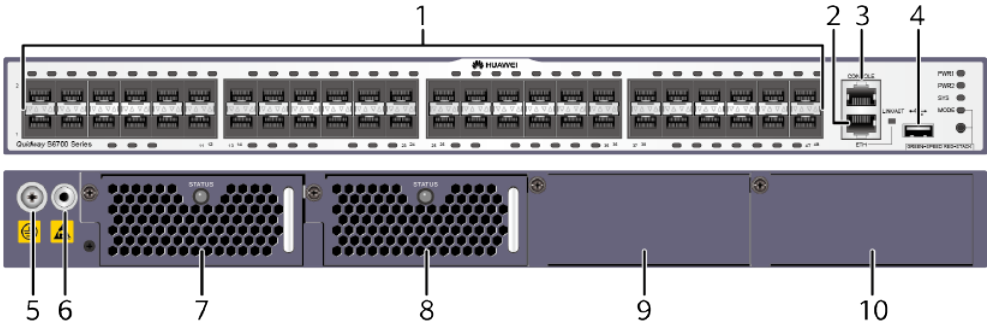

1	Forty-eight 10GE SFP+ ports Applicable modules and cables: • **GE optical module** • **GE-CWDM optical module** • **GE copper module (applicable in V200R001C01 and later versions, only 1000 Mbit/s supported)** • **10GE SFP+ optical module** • **10GE-CWDM optical module (applicable in V200R005C00 and later versions)** • **1 m and 3 m SFP+ high-speed copper cables** • **5 m SFP+ high-speed copper cables (applicable in V200R005C02)** • **10 m SFP+ high-speed copper cable (applicable in V200R001C00 and later versions)** • **3 m and 10 m AOC cables (applicable in V200R003C00 and later versions)**	2	One ETH management port
3	One console port	4	One USB port
5	Ground screw **NOTE** It is used with a **ground cable**.	6	ESD jack **NOTE** Before installing or maintaining a switch, wear an ESD wrist strap and insert the other end of the ESD wrist strap into this ESD jack.
7	Fan slot 2 **NOTE** Applicable fan module: **CX7E1FANA fan module**	8	Fan slot 1 **NOTE** Applicable fan module: **CX7E1FANA fan module**
9	Power module slot 2 **NOTE** • **500 W AC power module** • **500 W DC power module**	10	Power module slot 1 **NOTE** • **500 W AC power module** • **500 W DC power module**

Port Description

10GE SFP+ port

A 10GE SFP+ Ethernet optical port supports auto-sensing to 1000 Mbit/s. It sends and receives service data at 1000 Mbit/s or 10 Gbit/s. **Table 4-12** describes the attributes of a 10GE SFP+ Ethernet optical port.

Table 4-12 Attributes of a 10GE SFP+ port

Attribute	Description
Connector type	LC/PC
Optical port attributes	Depend on the optical module used
Standards compliance	IEEE802.3ae
Working mode	GE/10GE auto-sensing

Console port

The console port is connected to a console for on-site configuration. The port must use a **console cable**. The console port is used when a switch is powered on for the first time. For details about the attributes of a console port, see **Table 4-13**.

Table 4-13 Attributes of a console port

Attribute	Description
Connector type	RJ45
Standards compliance	RS-232
Working mode	Duplex Universal Asynchronous Receiver/Transmitter (UART)
Baud rate	9600 bit/s, 19200 bit/s, 38400 bit/s, 57600 bit/s, or 115200 bit/s Default value: 9600 bit/s

ETH management port

You can connect a switch to a configuration terminal or network management workstation through the ETH management port to configure the switch locally or remotely. The port must use an **Ethernet cable**. You can choose to download the software package through the ETH management port in the BootROM menu. File transfer through the ETH management port is faster than transfer through the console port. For details on how to use the ETH management port, see the

Configuration Guide - Basic Configurations. **Table 4-14** describes the attributes of an ETH management port.

Table 4-14 Attributes of an ETH management port

Attribute	Description
Connector type	RJ45
Standards compliance	IEEE802.3
Working mode	10/100 Mbit/s auto-sensing
Maximum transmission distance	100 m

USB port

The USB port can have a USB flash drive connected to upgrade the switch, or transfer configuration files or other files. The USB port can only connect to a USB flash drive that complies with USB 2.0.

NOTE

USB flash drives from different vendors differ in model compatibility and drivers. If a USB flash drive cannot be used, try to replace it with another one from a mainstream vendor. Switches support a maximum of 128 GB USB flash drives.

Indicator Description

The S6700-48-EI has the same types of indicators as the S6700-24-EI. For details, see **Indicator Description**.

Power Supply Configuration

The S6700-48-EI can use a single power module or double power modules for 1+1 power redundancy. In versions prior to V200R005C00, the switch cannot use AC and DC power modules simultaneously. In V200R005C00 and later versions, the switch support mixing of AC and DC power modules.

Figure 4-8 shows the power supply connections of dual DC power modules. After DC power is transmitted to the PWR module, the PWR module provides -53 V output voltage, and the motherboard provides power for the entire device.

Figure 4-8 Power supply connections of dual DC power modules

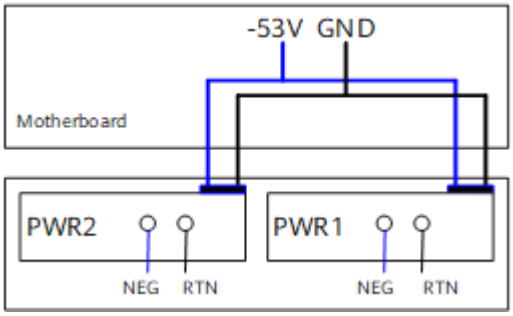

NEG: Negative wire RTN: Positive wire GND: -53 V reference ground

Figure 4-9 shows the power supply connections of dual AC power modules. After AC power is transmitted to the PWR module, the PWR module provides -53 V output voltage, and the motherboard provides power for the entire device.

Figure 4-9 Power supply connections of dual AC power modules

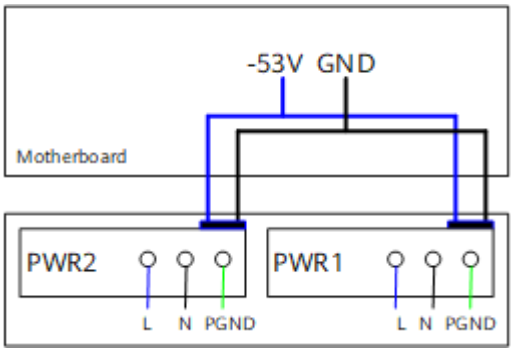

L: Live wire N: Neutral wire PGND: Protection ground wire GND: -53 V reference ground

Heat Dissipation

The S6700-48-EI uses pluggable fan modules for forced air cooling. Air flows in from the left and right sides, and exhausts from the rear panel.

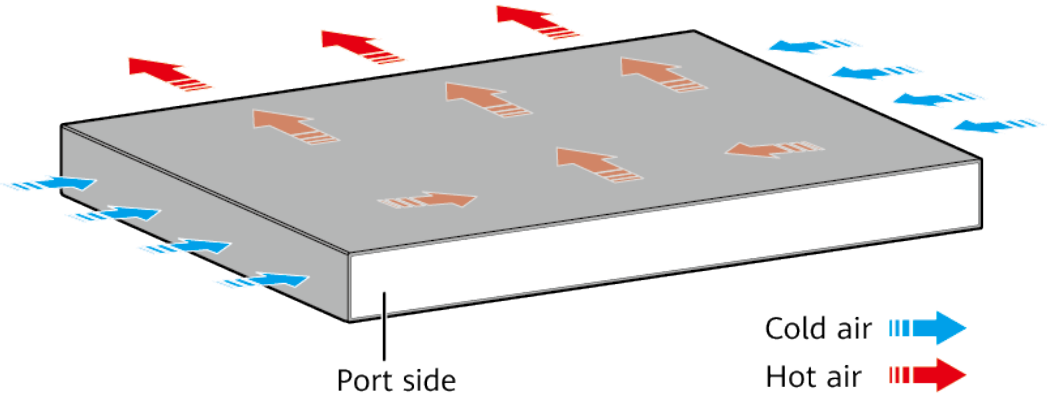

NOTE

This figure only shows the airflow direction and does not depict the actual device.

Technical Specifications

Table 4-15 lists technical specifications of the S6700-48-EI.

Table 4-15 Technical specifications

Item	Description
Memory (RAM)	512 MB
Flash	64 MB
Mean time between failures (MTBF)	33.76
Mean time to repair (MTTR)	2 hours
Availability	> 0.99999
Service port surge protection	NA
Power supply surge protection	• Using AC power modules: ±2 kV in differential mode, ±4 kV in common mode • Using DC power modules: ±1 kV in differential mode, ±2 kV in common mode
Dimensions (H x W x D)	43.6 mm x 442.0 mm x 420.0 mm (1.72 in. x 17.4 in. x 16.5 in.)
Weight	• Empty: ≤ 5 kg (11.02 lb) • Fully configured: ≤ 8.5 kg (18.74 lb)
Stack ports	Any 10GE SFP+ ports (a maximum of eight physical ports)
RPS	Not supported
PoE	Not supported
Rated voltage range	100 V AC to 240 V AC, 50/60 Hz -48 V DC to -60 V DC
Maximum voltage range	90 V AC to 264 V AC, 47 Hz to 63 Hz -38.4 V DC to -72 V DC
Maximum power consumption (100% throughput, full speed of fans)	240 W

Item	Description
Operating temperature	-5°C to +50°C (23°F to 122°F) at an altitude of 0-1800 m (0-5906 ft.) **NOTE** • The operating temperature of the switch is -5°C to +45°C (23°F to 113°F) when it uses SFP+ optical modules with 40 km or longer transmission distances. • When the altitude is 1800-5000 m (5906-16404 ft.), the highest operating temperature reduces by 1°C (1.8°F) every time the altitude increases by 220 m (722 ft.).
Storage temperature	-40°C to +70°C (-40°F to +158°F)
Noise under normal temperature (27°C, sound power)	< 55 dB(A)
Relative humidity	5% to 95%, noncondensing
Operating altitude	0-5000 m (0-16404 ft.)
Certification	• EMC certification • Safety certification • Manufacturing certification
Part number	02352767

4.5 S6720-LI

4.5.1 S6720-16X-LI-16S-AC

Version Mapping

Table 4-16 lists the mapping between the S6720-16X-LI-16S-AC chassis and software versions.

Table 4-16 Version mapping

Series	Model	Software Version
S6720-LI	S6720-16X-LI-16S-AC	V200R011C00 to V200R019C10 versions

Appearance and Structure

Figure 4-10 S6720-16X-LI-16S-AC appearance

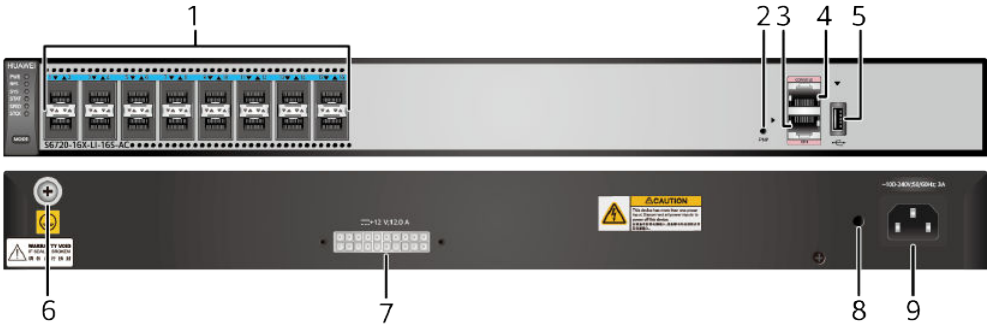

1	Sixteen 10GE SFP+ ports Applicable modules and cables: • **GE optical module** • **GE-CWDM optical module** • **GE-DWDM optical module** • **GE copper module (100M/1000M auto-sensing)** • **10GE SFP+ optical module (OSXD22N00 not supported)** • **10GE-CWDM optical module** • **10GE-DWDM optical module** • **1 m, 3 m, 5 m, and 10 m SFP+ high-speed copper cables** • **3 m and 10 m SFP+ AOC cables** • **0.5 m and 1.5 m SFP+ dedicated stack copper cables (used for zero-configuration stacking, supported in V200R011C10 and later versions)**	2	One PNP button **NOTICE** Applicable in V200R012C00 and later versions: To restore the factory settings and reset the switch, hold down the button for at least 6 seconds. To reset the switch, press the button. Resetting the switch will cause service interruption. Exercise caution when you press the PNP button.
3	One ETH management port	4	One console port
5	One USB port	6	Ground screw **NOTE** It is used with a **ground cable**.
7	RPS socket **NOTE** It is used with an **RPS cable**, which is not hot swappable.	8	Jack for AC power cable locking strap **NOTE** The AC power cable locking strap is not delivered with the switch.

9	AC socket **NOTE** It is used with an **AC power cable**.	-	-

Port Description

10GE SFP+ port

A 10GE SFP+ Ethernet optical port supports auto-sensing to 1000 Mbit/s. It sends and receives service data at 1000 Mbit/s or 10 Gbit/s. **Table 4-17** describes the attributes of a 10GE SFP+ Ethernet optical port.

Table 4-17 Attributes of a 10GE SFP+ port

Attribute	Description
Connector type	LC/PC
Optical port attributes	Depend on the optical module used
Standards compliance	IEEE802.3ae
Working mode	GE/10GE auto-sensing

Console port

The console port is connected to a console for on-site configuration. The port must use a **console cable**. The console port is used when a switch is powered on for the first time. For details about the attributes of a console port, see **Table 4-18**.

Table 4-18 Attributes of a console port

Attribute	Description
Connector type	RJ45
Standards compliance	RS-232
Working mode	Duplex Universal Asynchronous Receiver/Transmitter (UART)
Baud rate	9600 bit/s, 19200 bit/s, 38400 bit/s, 57600 bit/s, or 115200 bit/s Default value: 9600 bit/s

ETH management port

You can connect a switch to a configuration terminal or network management workstation through the ETH management port to configure the switch locally or remotely. The port must use an **Ethernet cable**. You can choose to download the software package through the ETH management port in the BootLoad menu. File transfer through the ETH management port is faster than transfer through the console port. **Table 4-19** describes the attributes of an ETH management port.

Table 4-19 Attributes of an ETH management port

Attribute	Description
Connector type	RJ45
Standards compliance	IEEE802.3
Working mode	10/100 Mbit/s auto-sensing
Maximum transmission distance	100 m

In V200R012C00 and later versions, you can log in to the switch that contains the ETH management port for the first time through the ETH port. For details, see "First Login to a Switch" in the *Configuration Guide - Basic Configuration*. If you have logged in to the device for the first time by pressing and holding the MODE button for 6 seconds or longer and saved the configuration, the default configuration on the ETH port will be cleared. In this case, you cannot log in to the switch for the first time through the ETH port. You are advised to log in to the switch for the first time through the ETH port.

USB port

The USB port can have a USB flash drive connected to upgrade the switch, or transfer configuration files or other files. The USB port can only connect to a USB flash drive that complies with USB 2.0.

NOTE

USB flash drives from different vendors differ in model compatibility and drivers. If a USB flash drive cannot be used, try to replace it with another one from a mainstream vendor. Switches support a maximum of 128 GB USB flash drives.

Indicator Description

The S6720-16X-LI-16S-AC has similar indicators to those of the S6720-26Q-LI-24S-AC, except that the S6720-16X-LI-16S-AC has no 40GE port indicators. For details, see **Indicator Description**.

Power Supply Configuration

The S6720-16X-LI-16S-AC has a built-in power module and does not support pluggable power modules. It can connect to an RPS1800 power supply for power redundancy.

Figure 4-11 shows the power supply mode of a built-in AC power module. The built-in AC power module (PWR) receives power from an external power source and provides a 12 V output to the chassis.

Figure 4-11 Power supply mode of a built-in AC power module

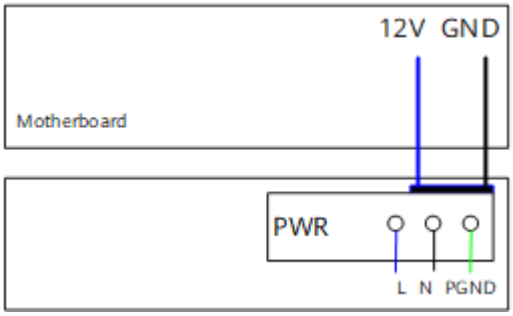

L: live wire N: neutral wire PGND: protection ground wire GND: 12 V reference ground

Heat Dissipation

The S6720-16X-LI-16S-AC has three built-in fans for forced air cooling. Air flows in from the left side and front panel, and exhausts from the right side.

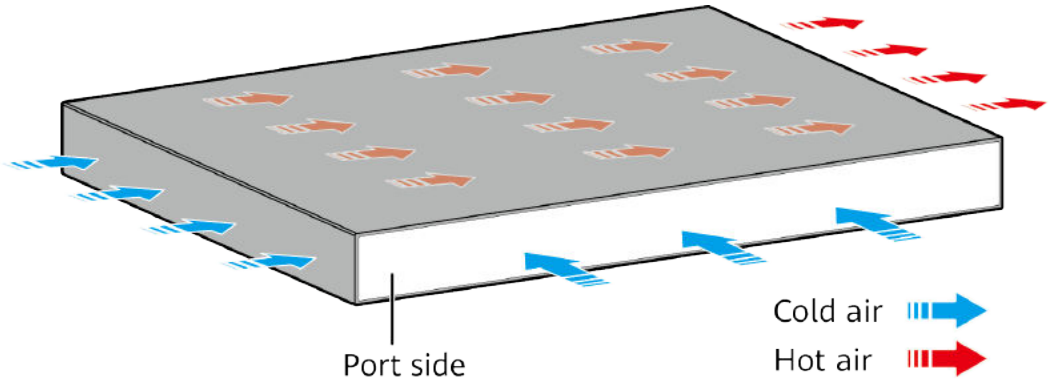

NOTE

This figure only shows the airflow direction and does not depict the actual device.

Technical Specifications

Table 4-20 lists technical specifications of the S6720-16X-LI-16S-AC.

Table 4-20 Technical specifications

Item	Description
Memory (RAM)	1 GB

Item	Description
Flash	512 MB in total. To view the available flash memory size, run the **display version** command.
Mean time between failures (MTBF)	39.2 years
Mean time to repair (MTTR)	2 hours
Availability	> 0.99999
Service port surge protection	NA
Power supply surge protection	±6 kV in differential mode, ± 6 kV in common mode
Dimensions (H x W x D)	• Basic dimensions (excluding the parts protruding from the body): 43.6 mm x 442.0 mm x 225.0 mm (1.72 in. x 17.4 in. x 8.86 in.) • Maximum dimensions (the depth is the distance from ports on the front panel to the parts protruding from the rear panel): 43.6 mm x 442.0 mm x 234.4 mm (1.72 in. x 17.4 in. x 9.23 in.)
Weight (including package)	4.1 kg (9.04 lb)
Stack ports	Any 10GE SFP+ ports
RTC	Supported
RPS	Supported
PoE	Not supported
Rated voltage range	100 V AC to 240 V AC, 50/60 Hz
Maximum voltage range	90 V AC to 264 V AC, 47 Hz to 63 Hz
Maximum power consumption (100% throughput, full speed of fans)	67.9 W

Item	Description
Typical power consumption (30% of traffic load, tested according to ATIS standard)	45.2 W
Operating temperature	0°C to 45°C (32°F to 113°F) at an altitude of 0-1800 m (0-5906 ft.) **NOTE** When the altitude is 1800-5000 m (5906-16404 ft.), the highest operating temperature reduces by 1°C (1.8°F) every time the altitude increases by 220 m (722 ft.).
Short-term operating temperature	-5°C to +50°C (23°F to 122°F) at an altitude of 0-1800 m (0-5906 ft.) **NOTE** When the altitude is 1800-5000 m (5906-16404 ft.), the highest operating temperature reduces by 1°C (1.8°F) every time the altitude increases by 220 m (722 ft.). The equipment can operate beyond the normal operating temperature range for a short-term period, but the following conditions must be met: ● The equipment operates at a temperature of over 45°C (113°F) consecutively for at most 96 hours in one year. ● The equipment operates at a temperature of over 45°C (113°F) for a total of no more than 360 hours in one year. ● The equipment operates at a temperature of over 45°C (113°F) for no more in 15 times in one year. The equipment may be damaged or experience unexpected exceptions if any of the preceding limits is exceeded. The equipment cannot start when the temperature is lower than 0°C (32°F). The maximum distance of optical modules used in these conditions cannot exceed 10 km.
Storage temperature	-40°C to +70°C (-40°F to +158°F)
Noise under normal temperature (27°C, sound power)	< 46.5 dB(A)
Relative humidity	5% to 95%, noncondensing
Operating altitude	0-5000 m (0-16404 ft.)
Certification	● EMC certification ● Safety certification ● Manufacturing certification

Item	Description
Part number	98010687

4.5.2 S6720-32X-LI-32S-AC

Version Mapping

Table 4-21 lists the mapping between the S6720-32X-LI-32S-AC chassis and software versions.

Table 4-21 Version mapping

Series	Model	Software Version
S6720-LI	S6720-32X-LI-32S-AC	V200R011C00 to V200R019C10 versions

Appearance and Structure

Figure 4-12 S6720-32X-LI-32S-AC appearance

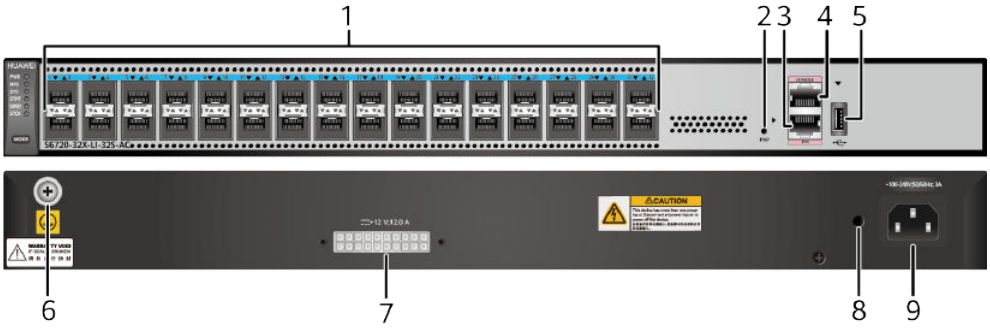

1	Thirty-two 10GE SFP+ ports Applicable modules and cables: • **GE optical module** • **GE-CWDM optical module** • **GE-DWDM optical module** • **GE copper module (100M/1000M auto-sensing)** • **10GE SFP+ optical module (OSXD22N00 not supported)** • **10GE-CWDM optical module** • **10GE-DWDM optical module** • **1 m, 3 m, 5 m, and 10 m SFP+ high-speed copper cables** • **3 m and 10 m SFP+ AOC cables** • **0.5 m and 1.5 m SFP+ dedicated stack copper cables (the last 16 ports are supported, used for zero-configuration stacking, supported in V200R011C10 and later versions)**	2	One PNP button **NOTICE** Applicable in V200R012C00 and later versions: To restore the factory settings and reset the switch, hold down the button for at least 6 seconds. To reset the switch, press the button. Resetting the switch will cause service interruption. Exercise caution when you press the PNP button.
3	One ETH management port	4	One console port
5	One USB port	6	Ground screw **NOTE** It is used with a **ground cable**.
7	RPS socket **NOTE** It is used with an **RPS cable**, which is not hot swappable.	8	Jack for AC power cable locking strap **NOTE** The AC power cable locking strap is not delivered with the switch.
9	AC socket **NOTE** It is used with an **AC power cable**.	-	-

Port Description

10GE SFP+ port

A 10GE SFP+ Ethernet optical port supports auto-sensing to 1000 Mbit/s. It sends and receives service data at 1000 Mbit/s or 10 Gbit/s. **Table 4-22** describes the attributes of a 10GE SFP+ Ethernet optical port.

Table 4-22 Attributes of a 10GE SFP+ port

Attribute	Description
Connector type	LC/PC
Optical port attributes	Depend on the optical module used
Standards compliance	IEEE802.3ae
Working mode	GE/10GE auto-sensing

Console port

The console port is connected to a console for on-site configuration. The port must use a **console cable**. The console port is used when a switch is powered on for the first time. For details about the attributes of a console port, see **Table 4-23**.

Table 4-23 Attributes of a console port

Attribute	Description
Connector type	RJ45
Standards compliance	RS-232
Working mode	Duplex Universal Asynchronous Receiver/Transmitter (UART)
Baud rate	9600 bit/s, 19200 bit/s, 38400 bit/s, 57600 bit/s, or 115200 bit/s Default value: 9600 bit/s

ETH management port

You can connect a switch to a configuration terminal or network management workstation through the ETH management port to configure the switch locally or remotely. The port must use an **Ethernet cable**. You can choose to download the software package through the ETH management port in the BootLoad menu. File transfer through the ETH management port is faster than transfer through the console port. **Table 4-24** describes the attributes of an ETH management port.

Table 4-24 Attributes of an ETH management port

Attribute	Description
Connector type	RJ45

Attribute	Description
Standards compliance	IEEE802.3
Working mode	10/100 Mbit/s auto-sensing
Maximum transmission distance	100 m

In V200R012C00 and later versions, you can log in to the switch that contains the ETH management port for the first time through the ETH port. For details, see "First Login to a Switch" in the *Configuration Guide - Basic Configuration*. If you have logged in to the device for the first time by pressing and holding the MODE button for 6 seconds or longer and saved the configuration, the default configuration on the ETH port will be cleared. In this case, you cannot log in to the switch for the first time through the ETH port. You are advised to log in to the switch for the first time through the ETH port.

USB port

The USB port can have a USB flash drive connected to upgrade the switch, or transfer configuration files or other files. The USB port can only connect to a USB flash drive that complies with USB 2.0.

NOTE

USB flash drives from different vendors differ in model compatibility and drivers. If a USB flash drive cannot be used, try to replace it with another one from a mainstream vendor. Switches support a maximum of 128 GB USB flash drives.

Indicator Description

The S6720-32X-LI-32S-AC has similar indicators to those of the S6720-26Q-LI-24S-AC, except that the S6720-32X-LI-32S-AC has no 40GE port indicators. For details, see **Indicator Description**.

Power Supply Configuration

The S6720-32X-LI-32S-AC has a built-in power module and does not support pluggable power modules. It can connect to an RPS1800 power supply for power redundancy.

Figure 4-13 shows the power supply mode of a built-in AC power module. The built-in AC power module (PWR) receives power from an external power source and provides a 12 V output to the chassis.

Figure 4-13 Power supply mode of a built-in AC power module

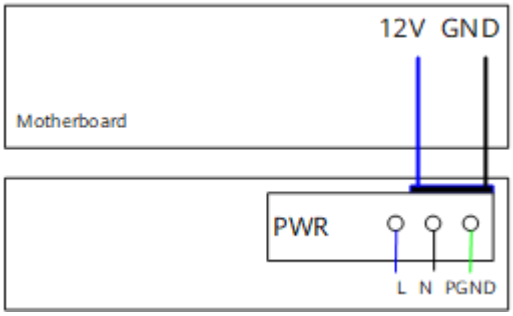

L: live wire N: neutral wire PGND: protection ground wire GND: 12 V reference ground

Heat Dissipation

The S6720-32X-LI-32S-AC has three built-in fans for forced air cooling. Air flows in from the left side and front panel, and exhausts from the right side.

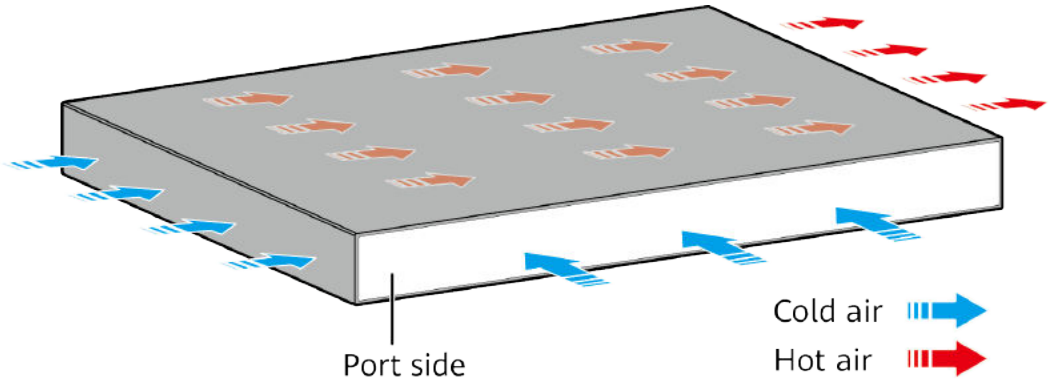

NOTE

This figure only shows the airflow direction and does not depict the actual device.

Technical Specifications

Table 4-25 lists technical specifications of the S6720-32X-LI-32S-AC.

Table 4-25 Technical specifications

Item	Description
Memory (RAM)	1 GB
Flash	512 MB in total. To view the available flash memory size, run the **display version** command.
Mean time between failures (MTBF)	42.8 years

Item	Description
Mean time to repair (MTTR)	2 hours
Availability	> 0.99999
Service port surge protection	NA
Power supply surge protection	±6 kV in differential mode, ± 6 kV in common mode
Dimensions (H x W x D)	• Basic dimensions (excluding the parts protruding from the body): 43.6 mm x 442.0 mm x 225.0 mm (1.72 in. x 17.4 in. x 8.86 in.) • Maximum dimensions (the depth is the distance from ports on the front panel to the parts protruding from the rear panel): 43.6 mm x 442.0 mm x 234.4 mm (1.72 in. x 17.4 in. x 9.23 in.)
Weight (including package)	4.3 kg (9.48 lb)
Stack ports	Any 10GE SFP+ ports (a maximum of 16 physical ports)
RTC	Supported
RPS	Supported
PoE	Not supported
Rated voltage range	100 V AC to 240 V AC, 50/60 Hz
Maximum voltage range	90 V AC to 264 V AC, 47 Hz to 63 Hz
Maximum power consumption (100% throughput, full speed of fans)	108.5 W
Typical power consumption (30% of traffic load, tested according to ATIS standard)	71.8 W

Item	Description
Operating temperature	0°C to 45°C (32°F to 113°F) at an altitude of 0-1800 m (0-5906 ft.) **NOTE** When the altitude is 1800-5000 m (5906-16404 ft.), the highest operating temperature reduces by 1°C (1.8°F) every time the altitude increases by 220 m (722 ft.).
Short-term operating temperature	-5°C to +50°C (23°F to 122°F) at an altitude of 0-1800 m (0-5906 ft.) **NOTE** When the altitude is 1800-5000 m (5906-16404 ft.), the highest operating temperature reduces by 1°C (1.8°F) every time the altitude increases by 220 m (722 ft.). The equipment can operate beyond the normal operating temperature range for a short-term period, but the following conditions must be met: ● The equipment operates at a temperature of over 45°C (113°F) consecutively for at most 96 hours in one year. ● The equipment operates at a temperature of over 45°C (113°F) for a total of no more than 360 hours in one year. ● The equipment operates at a temperature of over 45°C (113°F) for no more in 15 times in one year. The equipment may be damaged or experience unexpected exceptions if any of the preceding limits is exceeded. The equipment cannot start when the temperature is lower than 0°C (32°F). The maximum distance of optical modules used in these conditions cannot exceed 10 km.
Storage temperature	-40°C to +70°C (-40°F to +158°F)
Noise under normal temperature (27°C, sound power)	< 46.4 dB(A)
Relative humidity	5% to 95%, noncondensing
Operating altitude	0-5000 m (0-16404 ft.)
Certification	● EMC certification ● Safety certification ● Manufacturing certification
Part number	98010693

4.5.3 S6720-26Q-LI-24S-AC

Version Mapping

Table 4-26 lists the mapping between the S6720-26Q-LI-24S-AC chassis and software versions.

Table 4-26 Version mapping

Series	Model	Software Version
S6720-LI	S6720-26Q-LI-24S-AC	V200R011C00 to V200R019C10 versions

Appearance and Structure

Figure 4-14 S6720-26Q-LI-24S-AC appearance

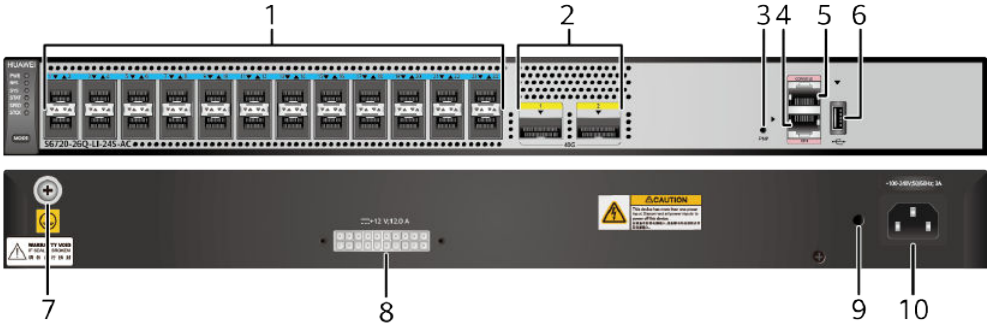

1	Twenty-four 10GE SFP+ ports Applicable modules and cables: • **GE optical module** • **GE-CWDM optical module** • **GE-DWDM optical module** • **GE copper module (100M/1000M auto-sensing)** • **10GE SFP+ optical module (OSXD22N00 not supported)** • **10GE-CWDM optical module** • **10GE-DWDM optical module** • **1 m, 3 m, 5 m, and 10 m SFP+ high-speed copper cables** • **3 m and 10 m SFP+ AOC cables** • **0.5 m and 1.5 m SFP+ dedicated stack copper cables (the last 16 ports are supported, used for zero-configuration stacking, supported in V200R011C10 and later versions)**	2	Two 40GE QSFP+ ports Applicable modules and cables: • **QSFP+ optical module** • **1 m, 3 m, and 5 m QSFP+ to QSFP+ high-speed copper cables** • **1 m, 3 m, and 5 m QSFP+ to 4*SFP+ high-speed copper cables** • **10 m QSFP+ to QSFP+ AOC cable** • **10 m QSFP+ to 4*SFP+ AOC cable** **NOTE** A 40GE QSFP+ optical port can be split into four 10GE ports.
3	One PNP button **NOTICE** Applicable in V200R012C00 and later versions: To restore the factory settings and reset the switch, hold down the button for at least 6 seconds. To reset the switch, press the button. Resetting the switch will cause service interruption. Exercise caution when you press the PNP button.	4	One ETH management port
5	One console port	6	One USB port
7	Ground screw **NOTE** It is used with a **ground cable**.	8	RPS socket **NOTE** It is used with an **RPS cable**, which is not hot swappable.
9	Jack for AC power cable locking strap **NOTE** The AC power cable locking strap is not delivered with the switch.	10	AC socket **NOTE** It is used with an **AC power cable**.

Port Description

10GE SFP+ port

A 10GE SFP+ Ethernet optical port supports auto-sensing to 1000 Mbit/s. It sends and receives service data at 1000 Mbit/s or 10 Gbit/s. **Table 4-27** describes the attributes of a 10GE SFP+ Ethernet optical port.

Table 4-27 Attributes of a 10GE SFP+ port

Attribute	Description
Connector type	LC/PC
Optical port attributes	Depend on the optical module used
Standards compliance	IEEE802.3ae
Working mode	GE/10GE auto-sensing

40GE QSFP+ port

A 40GE QSFP+ optical port sends and receives service traffic at 40 Gbit/s and can be split into four 10GE ports. After a split, the 40GE QSFP+ optical port needs to be connected to a remote device using a 1-to-4 QSFP+ fiber (with matching optical modules), a 1-to-4 QSFP+ AOC cable, or a 1-to-4 QSFP+ copper cable. **Table 4-28** describes the attributes of a 40GE QSFP+ optical port.

Table 4-28 Attributes of a 40GE QSFP+ optical port

Attribute	Description
Connector type	MPO/LC
Optical port attributes	Depend on the optical module used
Standards compliance	IEEE802.3ba

Console port

The console port is connected to a console for on-site configuration. The port must use a **console cable**. The console port is used when a switch is powered on for the first time. For details about the attributes of a console port, see **Table 4-29**.

Table 4-29 Attributes of a console port

Attribute	Description
Connector type	RJ45
Standards compliance	RS-232
Working mode	Duplex Universal Asynchronous Receiver/Transmitter (UART)
Baud rate	9600 bit/s, 19200 bit/s, 38400 bit/s, 57600 bit/s, or 115200 bit/s Default value: 9600 bit/s

ETH management port

You can connect a switch to a configuration terminal or network management workstation through the ETH management port to configure the switch locally or remotely. The port must use an **Ethernet cable**. You can choose to download the software package through the ETH management port in the BootLoad menu. File transfer through the ETH management port is faster than transfer through the console port. **Table 4-30** describes the attributes of an ETH management port.

Table 4-30 Attributes of an ETH management port

Attribute	Description
Connector type	RJ45
Standards compliance	IEEE802.3
Working mode	10/100 Mbit/s auto-sensing
Maximum transmission distance	100 m

In V200R012C00 and later versions, you can log in to the switch that contains the ETH management port for the first time through the ETH port. For details, see "First Login to a Switch" in the *Configuration Guide - Basic Configuration*. If you have logged in to the device for the first time by pressing and holding the MODE button for 6 seconds or longer and saved the configuration, the default configuration on the ETH port will be cleared. In this case, you cannot log in to the switch for the first time through the ETH port. You are advised to log in to the switch for the first time through the ETH port.

USB port

The USB port can have a USB flash drive connected to upgrade the switch, or transfer configuration files or other files. The USB port can only connect to a USB flash drive that complies with USB 2.0.

NOTE

USB flash drives from different vendors differ in model compatibility and drivers. If a USB flash drive cannot be used, try to replace it with another one from a mainstream vendor. Switches support a maximum of 128 GB USB flash drives.

Indicator Description

NOTE

Hold down the mode switch button for 6s and release it to start the web initial login mode. Either of the following situations will occur:

- If the switch has no configuration file, the system attempts to enter the web initial login mode. In this mode, the status of mode indicators is as follows:
  - If the system enters the web initial login mode successfully, all mode indicators turn green and stay on for a maximum of 10 minutes.
  - If the system fails to enter the initial login mode, all mode indicators fast blink for 10 seconds and then restore the default status.
- If the switch has a configuration file, the system cannot enter the web initial login mode. In this case, all mode indicators fast blink for 10s, and then return to the default states.

Figure 4-15 Indicators on the S6720-26Q-LI-24S-AC

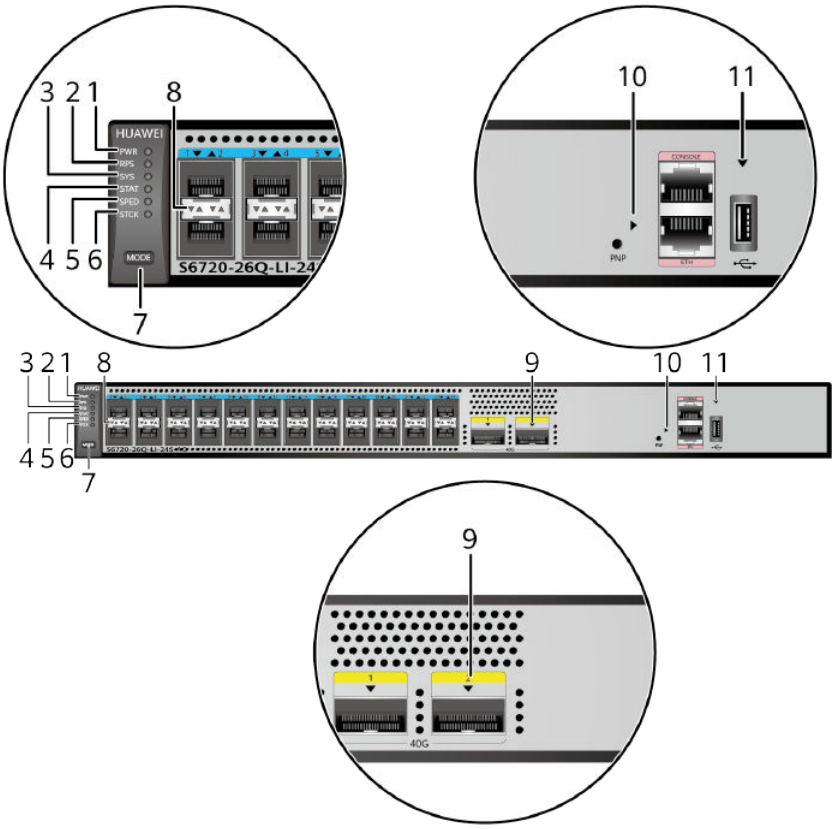

NOTE

The S6720-LI series switches provide a command for setting fault indicators, which help field maintenance personnel find a faulty switch quickly.

The SYS indicator and mode indicators (STAT, SPED, and STCK) are used as fault indicators of a switch. If the switch fails, its SYS indicator and mode indicators can be configured to blink red fast so that field maintenance personnel can find this faulty switch.

Table 4-31 Description of indicators on the switch

No.	Indicator	Name	Color	Status	Description
1	PWR	Power module indicator	-	Off	The switch is powered off.
			Green	Steady on	The system power supply is normal.
			Yellow	Steady on	The built-in power module has failed, and the switch is receiving power from a redundant power supply (RPS).
2	RPS	RPS indicator	-	Off	The switch is not connected to an RPS.
			Green	Steady on	The RPS is in cold standby state.
			Green	Blinking	The RPS is supplying power to another switch.
			Yellow	Blinking	The RPS is supplying power to the local switch, and the built-in power module of the switch has failed.
3	SYS	System status indicator	-	Off	The system is not running.
			Green	Fast blinking	The system is starting.
			Green	Slow blinking	The system is running normally.
			Red	Steady on	The system does not work normally after registration, or a fan alarm or temperature alarm has been generated.
4	STAT	Status indicator	-	Off	The status mode is not selected.
			Green	Steady on	The status mode (default mode) is selected. If the status mode is selected, the service port indicator shows the port link or activity state.

No.	Indicator	Name	Color	Status	Description
5	SPED	Speed indicator	-	Off	The speed mode is not selected.
			Green	Steady on	The service port indicators show the port speeds. After 45 seconds, the service port indicators automatically restore to the status mode.
6	STCK	Stack indicator	-	Off	● If you are not changing the indicator mode (default): The switch is in stack standby or slave state or the stacking function is not enabled on the switch. ● If you are changing the indicator mode: The stack mode is not selected.
			Green	Steady on	The switch is a standby or slave switch in a stack, and the service port indicators show the stack ID of the switch.
			Green	Blinking	● If you are not changing the indicator mode (default): The switch is a stack master switch or a standalone switch with the stacking function enabled. ● If you are changing the indicator mode: The switch is the master switch in a stack or a standalone switch, and the service port indicators show the stack ID of the master switch. After 45 seconds, the service port indicators automatically restore to the status mode.

No.	Indicator	Name	Color	Status	Description
7	MODE	Mode switch button	-	-	• When you press this button once, the service port indicators change to the speed mode and show the speed of each service port. • When you press this button a second time, the service port indicators change to the stack mode and show the stack ID of the local switch. • When you press this button a third time, the service port indicators restore to the default mode, and the STAT indicator turns green. If you do not press the MODE button within 45 seconds, the service port indicators restore to the default mode. In this case, the STAT indicator is steady green, the SPED indicator is off, and the STCK indicator is off or blinking green.
8	-	10GE service port indicator (two indicators for each port)	Meanings of service port indicators vary in different modes. For details, see **Table 4-32**.		
9	-	40GE service port indicator (one indicator for each port)	Meanings of service port indicators vary in different modes. For details, see **Table 4-33**.		
10	-	ETH port indicator	-	Off	The ETH port is not connected.
			Green	Steady on	The ETH port is connected.
			Green	Blinking	The ETH port is sending or receiving data.

No.	Indicator	Name	Color	Status	Description
11	-	USB-based deployment indicator	-	Off	● No USB flash drive is connected to the switch. ● The USB port is damaged. ● The indicator is damaged. ● The USB flash drive does not have any configuration file and cannot be used for deployment. ● The switch has been upgraded using the USB flash drive and is restarting.
			Green	Steady on	A USB-based deployment has been completed.
			Green	Blinking	The system is reading data from the USB flash drive.
			Yellow	Steady on	The switch has copied all the required files and completed the file check. The USB flash drive can be removed from the switch.
			Red	Blinking	An error has occurred when the system is executing the configuration file or reading data from the USB flash drive.

Table 4-32 Description of 10GE service port indicators in different modes (two indicators for each port)

Display Mode	Color	Status	Description
Status	-	Off	The port is not connected or has been shut down.
	Green	Steady on	A link has been established on the port.
	Yellow	Blinking	The port is sending or receiving data.
Speed	-	Off	The port is not connected or has been shut down.
	Green and yellow	Steady on	1000M/10GE port: The port is operating at 1000 Mbit/s.

Display Mode	Color	Status	Description
	Green and yellow	Blinking	1000M/10GE port: The port is operating at 10 Gbit/s.
Stack	-	Off	Port indicators do not show the stack ID of the switch.
	Green and yellow	Steady on	The switch is not the master switch in a stack. ● If the indicator of a port is steady on, the number of this port is the stack ID of the switch. ● If the indicators of ports 1 to 9 are steady on, the stack ID of the switch is 0.
	Green and yellow	Blinking	The switch is the master switch in a stack. ● If the indicator of a port is blinking, the number of this port is the stack ID of the switch. ● If the indicators of ports 1 to 9 are blinking, the stack ID of the switch is 0.

Table 4-33 Description of 40GE service port indicators in different modes (one indicator for each port)

Display Mode	Color	Status	Description
Status	-	Off	The port is not connected or has been shut down.
	Green	Steady on	A link has been established on the port.
	Green	Blinking	The port is sending or receiving data.
Speed	-	Off	The port is not connected or has been shut down.
	Green	Steady on	The port is operating at 10 Gbit/s.
	Green	Blinking	The port is operating at 40 Gbit/s.

Power Supply Configuration

The S6720-26Q-LI-24S-AC has a built-in power module and does not support pluggable power modules. It can connect to an RPS1800 power supply for power redundancy.

Figure 4-16 shows the power supply mode of a built-in AC power module. The built-in AC power module (PWR) receives power from an external power source and provides a 12 V output to the chassis.

Figure 4-16 Power supply mode of a built-in AC power module

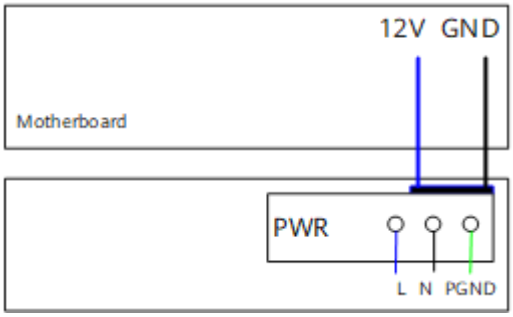

L: live wire N: neutral wire PGND: protection ground wire GND: 12 V reference ground

Heat Dissipation

The S6720-26Q-LI-24S-AC has three built-in fans for forced air cooling. Air flows in from the left side and front panel, and exhausts from the right side.

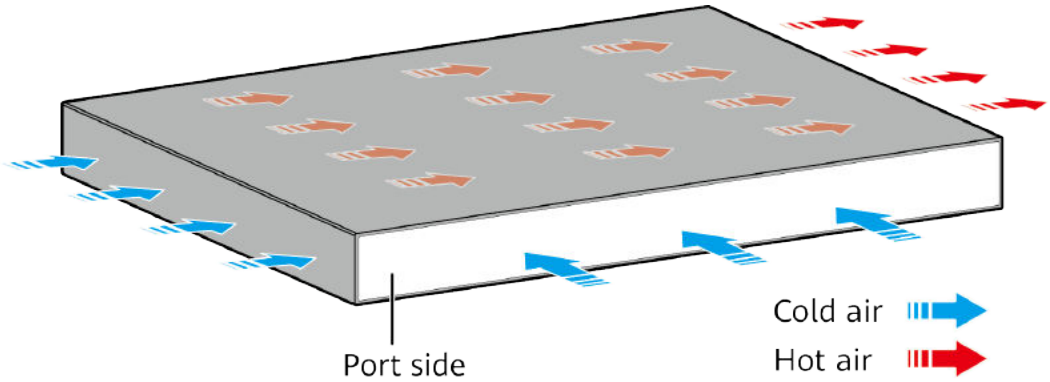

NOTE

This figure only shows the airflow direction and does not depict the actual device.

Technical Specifications

Table 4-34 lists technical specifications of the S6720-26Q-LI-24S-AC.

Table 4-34 Technical specifications

Item	Description
Memory (RAM)	1 GB
Flash	512 MB in total. To view the available flash memory size, run the **display version** command.
Mean time between failures (MTBF)	39.2 years
Mean time to repair (MTTR)	2 hours
Availability	> 0.99999
Service port surge protection	NA
Power supply surge protection	±6 kV in differential mode, ± 6 kV in common mode
Dimensions (H x W x D)	• Basic dimensions (excluding the parts protruding from the body): 43.6 mm x 442.0 mm x 225.0 mm (1.72 in. x 17.4 in. x 8.86 in.) • Maximum dimensions (the depth is the distance from ports on the front panel to the parts protruding from the rear panel): 43.6 mm x 442.0 mm x 234.4 mm (1.72 in. x 17.4 in. x 9.23 in.)
Weight (including package)	4.2 kg (9.26 lb)
Stack ports	• Any 10GE SFP+ ports (a maximum of 16 physical ports) • Any 40GE QSFP+ ports (a maximum of 2 physical ports)
RTC	Supported
RPS	Supported
PoE	Not supported
Rated voltage range	100 V AC to 240 V AC, 50/60 Hz
Maximum voltage range	90 V AC to 264 V AC, 47 Hz to 63 Hz
Maximum power consumption (100% throughput, full speed of fans)	100.2 W

Item	Description
Typical power consumption (30% of traffic load, tested according to ATIS standard)	67.1 W
Operating temperature	0°C to 45°C (32°F to 113°F) at an altitude of 0-1800 m (0-5906 ft.) **NOTE** When the altitude is 1800-5000 m (5906-16404 ft.), the highest operating temperature reduces by 1°C (1.8°F) every time the altitude increases by 220 m (722 ft.).
Short-term operating temperature	-5°C to +50°C (23°F to 122°F) at an altitude of 0-1800 m (0-5906 ft.) **NOTE** When the altitude is 1800-5000 m (5906-16404 ft.), the highest operating temperature reduces by 1°C (1.8°F) every time the altitude increases by 220 m (722 ft.). The equipment can operate beyond the normal operating temperature range for a short-term period, but the following conditions must be met: ● The equipment operates at a temperature of over 45°C (113°F) consecutively for at most 96 hours in one year. ● The equipment operates at a temperature of over 45°C (113°F) for a total of no more than 360 hours in one year. ● The equipment operates at a temperature of over 45°C (113°F) for no more in 15 times in one year. The equipment may be damaged or experience unexpected exceptions if any of the preceding limits is exceeded. The equipment cannot start when the temperature is lower than 0°C (32°F). The maximum distance of optical modules used in these conditions cannot exceed 10 km.
Storage temperature	-40°C to +70°C (-40°F to +158°F)
Noise under normal temperature (27°C, sound power)	< 46.5 dB(A)
Relative humidity	5% to 95%, noncondensing
Operating altitude	0-5000 m (0-16404 ft.)
Certification	● EMC certification ● Safety certification ● Manufacturing certification

Item	Description
Part number	98010684

4.6 S6720S-LI

4.6.1 S6720S-16X-LI-16S-AC

Version Mapping

Table 4-35 lists the mapping between the S6720S-16X-LI-16S-AC chassis and software versions.

Table 4-35 Version mapping

Series	Model	Software Version
S6720S-LI	S6720S-16X-LI-16S-AC	V200R011C00 to V200R019C10 versions

Appearance and Structure

Figure 4-17 S6720S-16X-LI-16S-AC appearance

1	Sixteen 10GE SFP+ ports Applicable modules and cables: • **GE optical module** • **GE-CWDM optical module** • **GE-DWDM optical module** • **GE copper module (100M/1000M auto-sensing)** • **10GE SFP+ optical module (OSXD22N00 not supported)** • **10GE-CWDM optical module** • **10GE-DWDM optical module** • **1 m, 3 m, 5 m, and 10 m SFP+ high-speed copper cables** • **3 m and 10 m SFP+ AOC cables** • **0.5 m and 1.5 m SFP+ dedicated stack copper cables (used for zero-configuration stacking, supported in V200R011C10 and later versions)**	2	One PNP button **NOTICE** Applicable in V200R012C00 and later versions: To restore the factory settings and reset the switch, hold down the button for at least 6 seconds. To reset the switch, press the button. Resetting the switch will cause service interruption. Exercise caution when you press the PNP button.
3	One ETH management port	4	One console port
5	One USB port	6	Ground screw **NOTE** It is used with a **ground cable**.
7	RPS socket **NOTE** It is used with an **RPS cable**, which is not hot swappable.	8	Jack for AC power cable locking strap **NOTE** The AC power cable locking strap is not delivered with the switch.
9	AC socket **NOTE** It is used with an **AC power cable**.	-	-

Port Description

10GE SFP+ port

A 10GE SFP+ Ethernet optical port supports auto-sensing to 1000 Mbit/s. It sends and receives service data at 1000 Mbit/s or 10 Gbit/s. **Table 4-36** describes the attributes of a 10GE SFP+ Ethernet optical port.

Table 4-36 Attributes of a 10GE SFP+ port

Attribute	Description
Connector type	LC/PC
Optical port attributes	Depend on the optical module used
Standards compliance	IEEE802.3ae
Working mode	GE/10GE auto-sensing

Console port

The console port is connected to a console for on-site configuration. The port must use a **console cable**. The console port is used when a switch is powered on for the first time. For details about the attributes of a console port, see **Table 4-37**.

Table 4-37 Attributes of a console port

Attribute	Description
Connector type	RJ45
Standards compliance	RS-232
Working mode	Duplex Universal Asynchronous Receiver/Transmitter (UART)
Baud rate	9600 bit/s, 19200 bit/s, 38400 bit/s, 57600 bit/s, or 115200 bit/s Default value: 9600 bit/s

ETH management port

You can connect a switch to a configuration terminal or network management workstation through the ETH management port to configure the switch locally or remotely. The port must use an **Ethernet cable**. You can choose to download the software package through the ETH management port in the BootLoad menu. File transfer through the ETH management port is faster than transfer through the console port. **Table 4-38** describes the attributes of an ETH management port.

Table 4-38 Attributes of an ETH management port

Attribute	Description
Connector type	RJ45

Attribute	Description
Standards compliance	IEEE802.3
Working mode	10/100 Mbit/s auto-sensing
Maximum transmission distance	100 m

In V200R012C00 and later versions, you can log in to the switch that contains the ETH management port for the first time through the ETH port. For details, see "First Login to a Switch" in the *Configuration Guide - Basic Configuration*. If you have logged in to the device for the first time by pressing and holding the MODE button for 6 seconds or longer and saved the configuration, the default configuration on the ETH port will be cleared. In this case, you cannot log in to the switch for the first time through the ETH port. You are advised to log in to the switch for the first time through the ETH port.

USB port

The USB port can have a USB flash drive connected to upgrade the switch, or transfer configuration files or other files. The USB port can only connect to a USB flash drive that complies with USB 2.0.

NOTE

USB flash drives from different vendors differ in model compatibility and drivers. If a USB flash drive cannot be used, try to replace it with another one from a mainstream vendor. Switches support a maximum of 128 GB USB flash drives.

Indicator Description

The S6720S-16X-LI-16S-AC has similar indicators to those of the S6720-26Q-LI-24S-AC, except that the S6720S-16X-LI-16S-AC has no 40GE port indicators. For details, see **Indicator Description**.

Power Supply Configuration

The S6720S-16X-LI-16S-AC has a built-in power module and does not support pluggable power modules. It can connect to an RPS1800 power supply for power redundancy.

Figure 4-18 shows the power supply mode of a built-in AC power module. The built-in AC power module (PWR) receives power from an external power source and provides a 12 V output to the chassis.

Figure 4-18 Power supply mode of a built-in AC power module

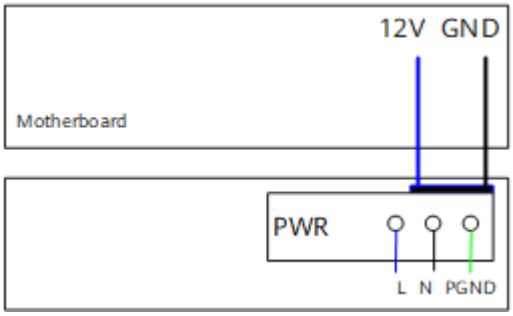

L: live wire N: neutral wire PGND: protection ground wire GND: 12 V reference ground

Heat Dissipation

The S6720S-16X-LI-16S-AC has three built-in fans for forced air cooling. Air flows in from the left side and front panel, and exhausts from the right side.

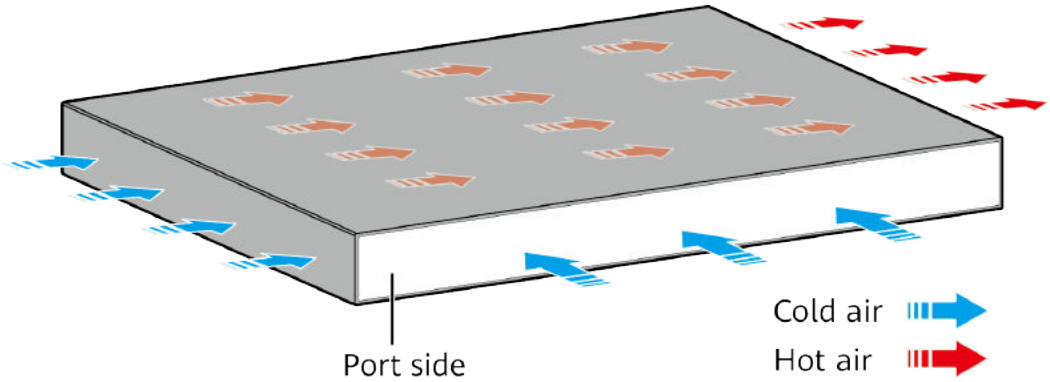

NOTE

This figure only shows the airflow direction and does not depict the actual device.

Technical Specifications

Table 4-39 lists technical specifications of the S6720S-16X-LI-16S-AC.

Table 4-39 Technical specifications

Item	Description
Memory (RAM)	1 GB
Flash	512 MB in total. To view the available flash memory size, run the **display version** command.
Mean time between failures (MTBF)	39.2 years

Item	Description
Mean time to repair (MTTR)	2 hours
Availability	> 0.99999
Service port surge protection	NA
Power supply surge protection	±6 kV in differential mode, ± 6 kV in common mode
Dimensions (H x W x D)	• Basic dimensions (excluding the parts protruding from the body): 43.6 mm x 442.0 mm x 225.0 mm (1.72 in. x 17.4 in. x 8.86 in.) • Maximum dimensions (the depth is the distance from ports on the front panel to the parts protruding from the rear panel): 43.6 mm x 442.0 mm x 234.4 mm (1.72 in. x 17.4 in. x 9.23 in.)
Weight (including package)	4.1 kg (9.04 lb)
Stack ports	Any 10GE SFP+ ports
RTC	Supported
RPS	Supported
PoE	Not supported
Rated voltage range	100 V AC to 240 V AC, 50/60 Hz
Maximum voltage range	90 V AC to 264 V AC, 47 Hz to 63 Hz
Maximum power consumption (100% throughput, full speed of fans)	67.9 W
Typical power consumption (30% of traffic load, tested according to ATIS standard)	45.2 W

Item	Description
Operating temperature	0°C to 45°C (32°F to 113°F) at an altitude of 0-1800 m (0-5906 ft.) **NOTE** When the altitude is 1800-5000 m (5906-16404 ft.), the highest operating temperature reduces by 1°C (1.8°F) every time the altitude increases by 220 m (722 ft.).
Short-term operating temperature	-5°C to +50°C (23°F to 122°F) at an altitude of 0-1800 m (0-5906 ft.) **NOTE** When the altitude is 1800-5000 m (5906-16404 ft.), the highest operating temperature reduces by 1°C (1.8°F) every time the altitude increases by 220 m (722 ft.). The equipment can operate beyond the normal operating temperature range for a short-term period, but the following conditions must be met: ● The equipment operates at a temperature of over 45°C (113°F) consecutively for at most 96 hours in one year. ● The equipment operates at a temperature of over 45°C (113°F) for a total of no more than 360 hours in one year. ● The equipment operates at a temperature of over 45°C (113°F) for no more in 15 times in one year. The equipment may be damaged or experience unexpected exceptions if any of the preceding limits is exceeded. The equipment cannot start when the temperature is lower than 0°C (32°F). The maximum distance of optical modules used in these conditions cannot exceed 10 km.
Storage temperature	-40°C to +70°C (-40°F to +158°F)
Noise under normal temperature (27°C, sound power)	< 46.5 dB(A)
Relative humidity	5% to 95%, noncondensing
Operating altitude	0-5000 m (0-16404 ft.)
Certification	● EMC certification ● Safety certification ● Manufacturing certification
Part number	98010688

4.6.2 S6720S-32X-LI-32S-AC

Version Mapping

Table 4-40 lists the mapping between the S6720S-32X-LI-32S-AC chassis and software versions.

Table 4-40 Version mapping

Series	Model	Software Version
S6720S-LI	S6720S-32X-LI-32S-AC	V200R011C00 to V200R019C10 versions

Appearance and Structure

Figure 4-19 S6720S-32X-LI-32S-AC appearance

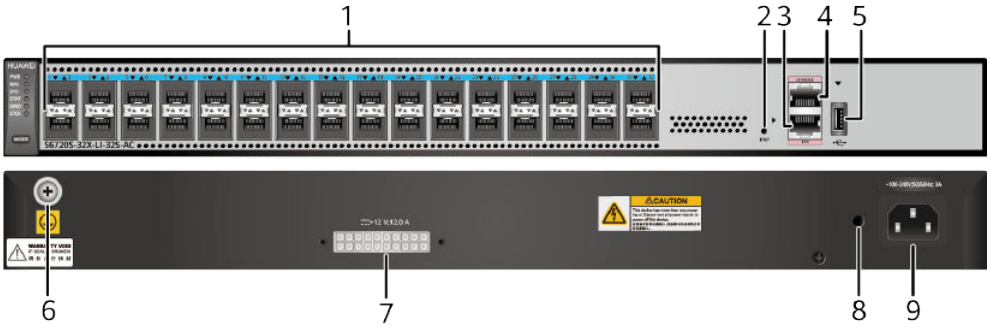

1	Thirty-two 10GE SFP+ ports Applicable modules and cables: • **GE optical module** • **GE-CWDM optical module** • **GE-DWDM optical module** • **GE copper module (100M/1000M auto-sensing)** • **10GE SFP+ optical module (OSXD22N00 not supported)** • **10GE-CWDM optical module** • **10GE-DWDM optical module** • **1 m, 3 m, 5 m, and 10 m SFP+ high-speed copper cables** • **3 m and 10 m SFP+ AOC cables** • **0.5 m and 1.5 m SFP+ dedicated stack copper cables (the last 16 ports are supported, used for zero-configuration stacking, supported in V200R011C10 and later versions)**	2	One PNP button **NOTICE** Applicable in V200R012C00 and later versions: To restore the factory settings and reset the switch, hold down the button for at least 6 seconds. To reset the switch, press the button. Resetting the switch will cause service interruption. Exercise caution when you press the PNP button.
3	One ETH management port	4	One console port
5	One USB port	6	Ground screw **NOTE** It is used with a **ground cable**.
7	RPS socket **NOTE** It is used with an **RPS cable**, which is not hot swappable.	8	Jack for AC power cable locking strap **NOTE** The AC power cable locking strap is not delivered with the switch.
9	AC socket **NOTE** It is used with an **AC power cable**.	-	-

Port Description

10GE SFP+ port

A 10GE SFP+ Ethernet optical port supports auto-sensing to 1000 Mbit/s. It sends and receives service data at 1000 Mbit/s or 10 Gbit/s. **Table 4-41** describes the attributes of a 10GE SFP+ Ethernet optical port.

Table 4-41 Attributes of a 10GE SFP+ port

Attribute	Description
Connector type	LC/PC
Optical port attributes	Depend on the optical module used
Standards compliance	IEEE802.3ae
Working mode	GE/10GE auto-sensing

Console port

The console port is connected to a console for on-site configuration. The port must use a **console cable**. The console port is used when a switch is powered on for the first time. For details about the attributes of a console port, see **Table 4-42**.

Table 4-42 Attributes of a console port

Attribute	Description
Connector type	RJ45
Standards compliance	RS-232
Working mode	Duplex Universal Asynchronous Receiver/Transmitter (UART)
Baud rate	9600 bit/s, 19200 bit/s, 38400 bit/s, 57600 bit/s, or 115200 bit/s Default value: 9600 bit/s

ETH management port

You can connect a switch to a configuration terminal or network management workstation through the ETH management port to configure the switch locally or remotely. The port must use an **Ethernet cable**. You can choose to download the software package through the ETH management port in the BootLoad menu. File transfer through the ETH management port is faster than transfer through the console port. **Table 4-43** describes the attributes of an ETH management port.

Table 4-43 Attributes of an ETH management port

Attribute	Description
Connector type	RJ45

Attribute	Description
Standards compliance	IEEE802.3
Working mode	10/100 Mbit/s auto-sensing
Maximum transmission distance	100 m

In V200R012C00 and later versions, you can log in to the switch that contains the ETH management port for the first time through the ETH port. For details, see "First Login to a Switch" in the *Configuration Guide - Basic Configuration*. If you have logged in to the device for the first time by pressing and holding the MODE button for 6 seconds or longer and saved the configuration, the default configuration on the ETH port will be cleared. In this case, you cannot log in to the switch for the first time through the ETH port. You are advised to log in to the switch for the first time through the ETH port.

USB port

The USB port can have a USB flash drive connected to upgrade the switch, or transfer configuration files or other files. The USB port can only connect to a USB flash drive that complies with USB 2.0.

NOTE

USB flash drives from different vendors differ in model compatibility and drivers. If a USB flash drive cannot be used, try to replace it with another one from a mainstream vendor. Switches support a maximum of 128 GB USB flash drives.

Indicator Description

The S6720S-32X-LI-32S-AC has similar indicators to those of the S6720-26Q-LI-24S-AC, except that the S6720S-32X-LI-32S-AC has no 40GE port indicators. For details, see **Indicator Description**.

Power Supply Configuration

The S6720S-32X-LI-32S-AC has a built-in power module and does not support pluggable power modules. It can connect to an RPS1800 power supply for power redundancy.

Figure 4-20 shows the power supply mode of a built-in AC power module. The built-in AC power module (PWR) receives power from an external power source and provides a 12 V output to the chassis.

Figure 4-20 Power supply mode of a built-in AC power module

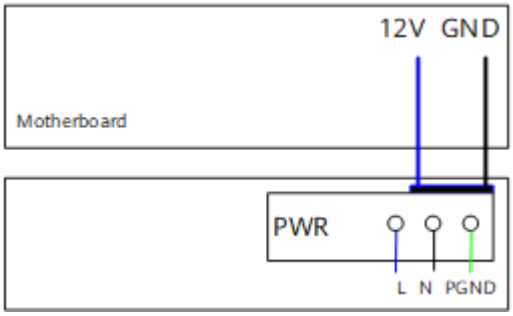

L: live wire N: neutral wire PGND: protection ground wire GND: 12 V reference ground

Heat Dissipation

The S6720S-32X-LI-32S-AC has three built-in fans for forced air cooling. Air flows in from the left side and front panel, and exhausts from the right side.

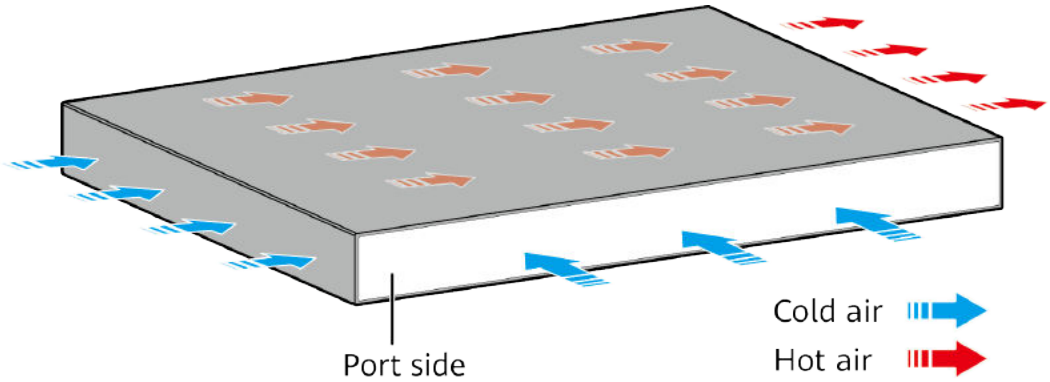

NOTE

This figure only shows the airflow direction and does not depict the actual device.

Technical Specifications

Table 4-44 lists technical specifications of the S6720S-32X-LI-32S-AC.

Table 4-44 Technical specifications

Item	Description
Memory (RAM)	1 GB
Flash	512 MB in total. To view the available flash memory size, run the **display version** command.
Mean time between failures (MTBF)	42.8 years

Item	Description
Mean time to repair (MTTR)	2 hours
Availability	> 0.99999
Service port surge protection	NA
Power supply surge protection	±6 kV in differential mode, ± 6 kV in common mode
Dimensions (H x W x D)	• Basic dimensions (excluding the parts protruding from the body): 43.6 mm x 442.0 mm x 225.0 mm (1.72 in. x 17.4 in. x 8.86 in.) • Maximum dimensions (the depth is the distance from ports on the front panel to the parts protruding from the rear panel): 43.6 mm x 442.0 mm x 234.4 mm (1.72 in. x 17.4 in. x 9.23 in.)
Weight (including package)	4.3 kg (9.48 lb)
Stack ports	Any 10GE SFP+ ports (a maximum of 16 physical ports)
RTC	Supported
RPS	Supported
PoE	Not supported
Rated voltage range	100 V AC to 240 V AC, 50/60 Hz
Maximum voltage range	90 V AC to 264 V AC, 47 Hz to 63 Hz
Maximum power consumption (100% throughput, full speed of fans)	108.5 W
Typical power consumption (30% of traffic load, tested according to ATIS standard)	71.8 W

Item	Description
Operating temperature	0°C to 45°C (32°F to 113°F) at an altitude of 0-1800 m (0-5906 ft.) **NOTE** When the altitude is 1800-5000 m (5906-16404 ft.), the highest operating temperature reduces by 1°C (1.8°F) every time the altitude increases by 220 m (722 ft.).
Short-term operating temperature	-5°C to +50°C (23°F to 122°F) at an altitude of 0-1800 m (0-5906 ft.) **NOTE** When the altitude is 1800-5000 m (5906-16404 ft.), the highest operating temperature reduces by 1°C (1.8°F) every time the altitude increases by 220 m (722 ft.). The equipment can operate beyond the normal operating temperature range for a short-term period, but the following conditions must be met: ● The equipment operates at a temperature of over 45°C (113°F) consecutively for at most 96 hours in one year. ● The equipment operates at a temperature of over 45°C (113°F) for a total of no more than 360 hours in one year. ● The equipment operates at a temperature of over 45°C (113°F) for no more in 15 times in one year. The equipment may be damaged or experience unexpected exceptions if any of the preceding limits is exceeded. The equipment cannot start when the temperature is lower than 0°C (32°F). The maximum distance of optical modules used in these conditions cannot exceed 10 km.
Storage temperature	-40°C to +70°C (-40°F to +158°F)
Noise under normal temperature (27°C, sound power)	< 46.4 dB(A)
Relative humidity	5% to 95%, noncondensing
Operating altitude	0-5000 m (0-16404 ft.)
Certification	● EMC certification ● Safety certification ● Manufacturing certification
Part number	98010694

4.6.3 S6720S-26Q-LI-24S-AC

Version Mapping

Table 4-45 lists the mapping between the S6720S-26Q-LI-24S-AC chassis and software versions.

Table 4-45 Version mapping

Series	Model	Software Version
S6720S-LI	S6720S-26Q-LI-24S-AC	V200R011C00 to V200R019C10 versions

Appearance and Structure

Figure 4-21 S6720S-26Q-LI-24S-AC appearance

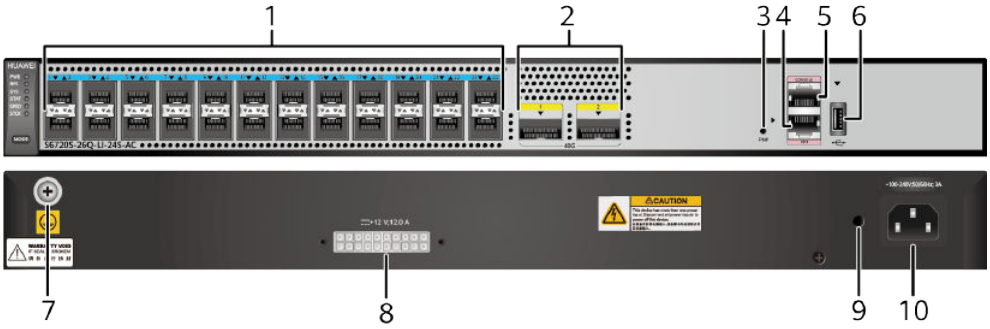

1	Twenty-four 10GE SFP+ ports Applicable modules and cables: • **GE optical module** • **GE-CWDM optical module** • **GE-DWDM optical module** • **GE copper module (100M/1000M auto-sensing)** • **10GE SFP+ optical module (OSXD22N00 not supported)** • **10GE-CWDM optical module** • **10GE-DWDM optical module** • **1 m, 3 m, 5 m, and 10 m SFP+ high-speed copper cables** • **3 m and 10 m SFP+ AOC cables** • **0.5 m and 1.5 m SFP+ dedicated stack copper cables (the last 16 ports are supported, used for zero-configuration stacking, supported in V200R011C10 and later versions)**	2	Two 40GE QSFP+ ports Applicable modules and cables: • **QSFP+ optical module** • **1 m, 3 m, and 5 m QSFP+ to QSFP+ high-speed copper cables** • **1 m, 3 m, and 5 m QSFP+ to 4*SFP+ high-speed copper cables** • **10 m QSFP+ to QSFP+ AOC cable** • **10 m QSFP+ to 4*SFP+ AOC cable** **NOTE** A 40GE QSFP+ optical port can be split into four 10GE ports.
3	One PNP button **NOTICE** Applicable in V200R012C00 and later versions: To restore the factory settings and reset the switch, hold down the button for at least 6 seconds. To reset the switch, press the button. Resetting the switch will cause service interruption. Exercise caution when you press the PNP button.	4	One ETH management port
5	One console port	6	One USB port
7	Ground screw **NOTE** It is used with a **ground cable**.	8	RPS socket **NOTE** It is used with an **RPS cable**, which is not hot swappable.
9	Jack for AC power cable locking strap **NOTE** The AC power cable locking strap is not delivered with the switch.	10	AC socket **NOTE** It is used with an **AC power cable**.

Port Description

10GE SFP+ port

A 10GE SFP+ Ethernet optical port supports auto-sensing to 1000 Mbit/s. It sends and receives service data at 1000 Mbit/s or 10 Gbit/s. **Table 4-46** describes the attributes of a 10GE SFP+ Ethernet optical port.

Table 4-46 Attributes of a 10GE SFP+ port

Attribute	Description
Connector type	LC/PC
Optical port attributes	Depend on the optical module used
Standards compliance	IEEE802.3ae
Working mode	GE/10GE auto-sensing

40GE QSFP+ port

A 40GE QSFP+ optical port sends and receives service traffic at 40 Gbit/s and can be split into four 10GE ports. After a split, the 40GE QSFP+ optical port needs to be connected to a remote device using a 1-to-4 QSFP+ fiber (with matching optical modules), a 1-to-4 QSFP+ AOC cable, or a 1-to-4 QSFP+ copper cable. **Table 4-47** describes the attributes of a 40GE QSFP+ optical port.

Table 4-47 Attributes of a 40GE QSFP+ optical port

Attribute	Description
Connector type	MPO/LC
Optical port attributes	Depend on the optical module used
Standards compliance	IEEE802.3ba

Console port

The console port is connected to a console for on-site configuration. The port must use a **console cable**. The console port is used when a switch is powered on for the first time. For details about the attributes of a console port, see **Table 4-48**.

Table 4-48 Attributes of a console port

Attribute	Description
Connector type	RJ45
Standards compliance	RS-232
Working mode	Duplex Universal Asynchronous Receiver/Transmitter (UART)
Baud rate	9600 bit/s, 19200 bit/s, 38400 bit/s, 57600 bit/s, or 115200 bit/s Default value: 9600 bit/s

ETH management port

You can connect a switch to a configuration terminal or network management workstation through the ETH management port to configure the switch locally or remotely. The port must use an **Ethernet cable**. You can choose to download the software package through the ETH management port in the BootLoad menu. File transfer through the ETH management port is faster than transfer through the console port. **Table 4-49** describes the attributes of an ETH management port.

Table 4-49 Attributes of an ETH management port

Attribute	Description
Connector type	RJ45
Standards compliance	IEEE802.3
Working mode	10/100 Mbit/s auto-sensing
Maximum transmission distance	100 m

In V200R012C00 and later versions, you can log in to the switch that contains the ETH management port for the first time through the ETH port. For details, see "First Login to a Switch" in the *Configuration Guide - Basic Configuration*. If you have logged in to the device for the first time by pressing and holding the MODE button for 6 seconds or longer and saved the configuration, the default configuration on the ETH port will be cleared. In this case, you cannot log in to the switch for the first time through the ETH port. You are advised to log in to the switch for the first time through the ETH port.

USB port

The USB port can have a USB flash drive connected to upgrade the switch, or transfer configuration files or other files. The USB port can only connect to a USB flash drive that complies with USB 2.0.

NOTE

USB flash drives from different vendors differ in model compatibility and drivers. If a USB flash drive cannot be used, try to replace it with another one from a mainstream vendor. Switches support a maximum of 128 GB USB flash drives.

Indicator Description

The S6720S-26Q-LI-24S-AC has the same types of indicators as the S6720-26Q-LI-24S-AC. For details, see **Indicator Description**.

Power Supply Configuration

The S6720S-26Q-LI-24S-AC has a built-in power module and does not support pluggable power modules. It can connect to an RPS1800 power supply for power redundancy.

Figure 4-22 shows the power supply mode of a built-in AC power module. The built-in AC power module (PWR) receives power from an external power source and provides a 12 V output to the chassis.

Figure 4-22 Power supply mode of a built-in AC power module

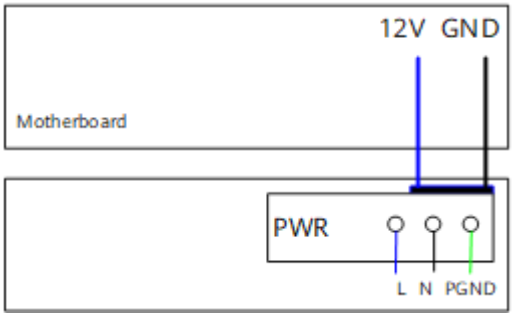

L: live wire N: neutral wire PGND: protection ground wire GND: 12 V reference ground

Heat Dissipation

The S6720S-26Q-LI-24S-AC has three built-in fans for forced air cooling. Air flows in from the left side and front panel, and exhausts from the right side.

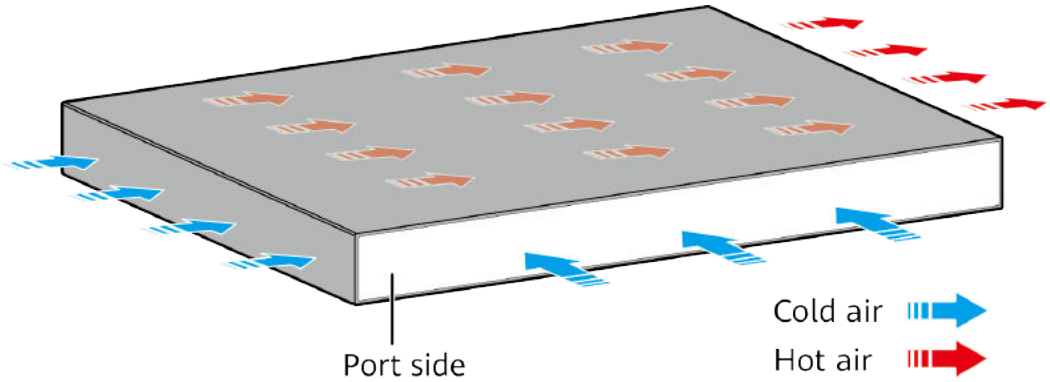

NOTE

This figure only shows the airflow direction and does not depict the actual device.

Technical Specifications

Table 4-50 lists technical specifications of the S6720S-26Q-LI-24S-AC.

Table 4-50 Technical specifications

Item	Description
Memory (RAM)	1 GB
Flash	512 MB in total. To view the available flash memory size, run the **display version** command.
Mean time between failures (MTBF)	39.2 years
Mean time to repair (MTTR)	2 hours
Availability	> 0.99999
Service port surge protection	NA
Power supply surge protection	±6 kV in differential mode, ± 6 kV in common mode
Dimensions (H x W x D)	• Basic dimensions (excluding the parts protruding from the body): 43.6 mm x 442.0 mm x 225.0 mm (1.72 in. x 17.4 in. x 8.86 in.) • Maximum dimensions (the depth is the distance from ports on the front panel to the parts protruding from the rear panel): 43.6 mm x 442.0 mm x 234.4 mm (1.72 in. x 17.4 in. x 9.23 in.)
Weight (including package)	4.2 kg (9.26 lb)
Stack ports	• Any 10GE SFP+ ports (a maximum of 16 physical ports) • Any 40GE QSFP+ ports (a maximum of 2 physical ports)
RTC	Supported
RPS	Supported
PoE	Not supported
Rated voltage range	100 V AC to 240 V AC, 50/60 Hz

Item	Description
Maximum voltage range	90 V AC to 264 V AC, 47 Hz to 63 Hz
Maximum power consumption (100% throughput, full speed of fans)	100.2 W
Typical power consumption (30% of traffic load, tested according to ATIS standard)	67.1 W
Operating temperature	0°C to 45°C (32°F to 113°F) at an altitude of 0-1800 m (0-5906 ft.) **NOTE** When the altitude is 1800-5000 m (5906-16404 ft.), the highest operating temperature reduces by 1°C (1.8°F) every time the altitude increases by 220 m (722 ft.).
Short-term operating temperature	-5°C to +50°C (23°F to 122°F) at an altitude of 0-1800 m (0-5906 ft.) **NOTE** When the altitude is 1800-5000 m (5906-16404 ft.), the highest operating temperature reduces by 1°C (1.8°F) every time the altitude increases by 220 m (722 ft.). The equipment can operate beyond the normal operating temperature range for a short-term period, but the following conditions must be met: ● The equipment operates at a temperature of over 45°C (113°F) consecutively for at most 96 hours in one year. ● The equipment operates at a temperature of over 45°C (113°F) for a total of no more than 360 hours in one year. ● The equipment operates at a temperature of over 45°C (113°F) for no more in 15 times in one year. The equipment may be damaged or experience unexpected exceptions if any of the preceding limits is exceeded. The equipment cannot start when the temperature is lower than 0°C (32°F). The maximum distance of optical modules used in these conditions cannot exceed 10 km.
Storage temperature	-40°C to +70°C (-40°F to +158°F)
Noise under normal temperature (27°C, sound power)	< 46.5 dB(A)

Item	Description
Relative humidity	5% to 95%, noncondensing
Operating altitude	0-5000 m (0-16404 ft.)
Certification	• EMC certification • Safety certification • Manufacturing certification
Part number	98010685

4.7 S6720-SI

4.7.1 S6720-26Q-SI-24S-AC

Version Mapping

Table 4-51 lists the mapping between the S6720-26Q-SI-24S-AC chassis and software versions.

Table 4-51 Version mapping

Series	Model	Software Version
S6720-SI	S6720-26Q-SI-24S-AC	V200R011C00 to V200R019C10 versions

Appearance and Structure

Figure 4-23 S6720-26Q-SI-24S-AC appearance

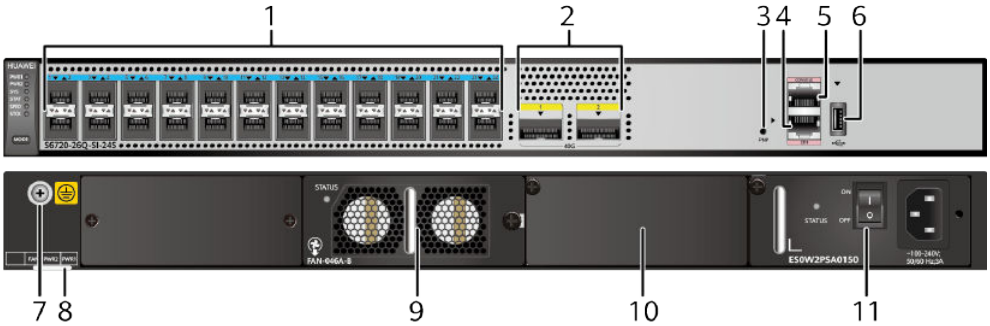

1	Twenty-four 10GE SFP+ ports Applicable modules and cables: • **GE optical module** • **GE-CWDM optical module** • **GE-DWDM optical module** • **GE copper module (100M/1000M auto-sensing)** • **10GE SFP+ optical module (OSXD22N00 not supported)** • **10GE-CWDM optical module** • **10GE-DWDM optical module** • **1 m, 3 m, 5 m, and 10 m SFP+ high-speed copper cables** • **3 m and 10 m SFP+ AOC cables** • **0.5 m and 1.5 m SFP+ dedicated stack copper cables (the last 16 ports are supported, used for zero-configuration stacking, supported in V200R011C10 and later versions)**	2	Two 40GE QSFP+ ports Applicable modules and cables: • **QSFP+ optical module** • **1 m, 3 m, and 5 m QSFP+ to QSFP+ high-speed copper cables** • **1 m, 3 m, and 5 m QSFP+ to 4*SFP+ high-speed copper cables** • **10 m QSFP+ to QSFP+ AOC cable** • **10 m QSFP+ to 4*SFP+ AOC cable** **NOTE** A 40GE QSFP+ optical port can be split into four 10GE ports.
3	One PNP button **NOTICE** Applicable in V200R012C00 and later versions: To restore the factory settings and reset the switch, hold down the button for at least 6 seconds. To reset the switch, press the button. Resetting the switch will cause service interruption. Exercise caution when you press the PNP button.	4	One ETH management port
5	One console port	6	One USB port
7	Ground screw **NOTE** It is used with a **ground cable**.	8	ESN label **NOTE** You can draw it out to view the ESN and MAC address of the switch.

9	Fan slot **NOTE** Applicable fan module: **6.3 FAN-046A-B Fan Module**	10	Power module slot 2 **NOTE** Applicable power modules: • **150 W AC power module** • **150 W DC power module**
11	Power module slot 1 **NOTE** Applicable power modules: • **150 W AC power module** • **150 W DC power module**	-	-

Port Description

10GE SFP+ port

A 10GE SFP+ Ethernet optical port supports auto-sensing to 1000 Mbit/s. It sends and receives service data at 1000 Mbit/s or 10 Gbit/s. **Table 4-52** describes the attributes of a 10GE SFP+ Ethernet optical port.

Table 4-52 Attributes of a 10GE SFP+ port

Attribute	Description
Connector type	LC/PC
Optical port attributes	Depend on the optical module used
Standards compliance	IEEE802.3ae
Working mode	GE/10GE auto-sensing

40GE QSFP+ port

A 40GE QSFP+ optical port sends and receives service traffic at 40 Gbit/s and can be split into four 10GE ports. After a split, the 40GE QSFP+ optical port needs to be connected to a remote device using a 1-to-4 QSFP+ fiber (with matching optical modules), a 1-to-4 QSFP+ AOC cable, or a 1-to-4 QSFP+ copper cable. **Table 4-53** describes the attributes of a 40GE QSFP+ optical port.

Table 4-53 Attributes of a 40GE QSFP+ optical port

Attribute	Description
Connector type	MPO/LC

Attribute	Description
Optical port attributes	Depend on the optical module used
Standards compliance	IEEE802.3ba

Console port

The console port is connected to a console for on-site configuration. The port must use a **console cable**. The console port is used when a switch is powered on for the first time. For details about the attributes of a console port, see **Table 4-54**.

Table 4-54 Attributes of a console port

Attribute	Description
Connector type	RJ45
Standards compliance	RS-232
Working mode	Duplex Universal Asynchronous Receiver/Transmitter (UART)
Baud rate	9600 bit/s, 19200 bit/s, 38400 bit/s, 57600 bit/s, or 115200 bit/s Default value: 9600 bit/s

ETH management port

You can connect a switch to a configuration terminal or network management workstation through the ETH management port to configure the switch locally or remotely. The port must use an **Ethernet cable**. You can choose to download the software package through the ETH management port in the BootLoad menu. File transfer through the ETH management port is faster than transfer through the console port. **Table 4-55** describes the attributes of an ETH management port.

Table 4-55 Attributes of an ETH management port

Attribute	Description
Connector type	RJ45
Standards compliance	IEEE802.3
Working mode	10/100 Mbit/s auto-sensing

Attribute	Description
Maximum transmission distance	100 m

In V200R012C00 and later versions, you can log in to the switch that contains the ETH management port for the first time through the ETH port. For details, see "First Login to a Switch" in the *Configuration Guide - Basic Configuration*. If you have logged in to the device for the first time by pressing and holding the MODE button for 6 seconds or longer and saved the configuration, the default configuration on the ETH port will be cleared. In this case, you cannot log in to the switch for the first time through the ETH port. You are advised to log in to the switch for the first time through the ETH port.

USB port

The USB port can have a USB flash drive connected to upgrade the switch, or transfer configuration files or other files. The USB port can only connect to a USB flash drive that complies with USB 2.0.

NOTE

USB flash drives from different vendors differ in model compatibility and drivers. If a USB flash drive cannot be used, try to replace it with another one from a mainstream vendor. Switches support a maximum of 128 GB USB flash drives.

Indicator Description

NOTE

Hold down the mode switch button for 6s and release it to start the web initial login mode. Either of the following situations will occur:

- If the switch has no configuration file, the system attempts to enter the web initial login mode. In this mode, the status of mode indicators is as follows:
  - If the system enters the web initial login mode successfully, all mode indicators turn green and stay on for a maximum of 10 minutes.
  - If the system fails to enter the initial login mode, all mode indicators fast blink for 10 seconds and then restore the default status.
- If the switch has a configuration file, the system cannot enter the web initial login mode. In this case, all mode indicators fast blink for 10s, and then return to the default states.

Figure 4-24 Indicators on the S6720-26Q-SI-24S-AC

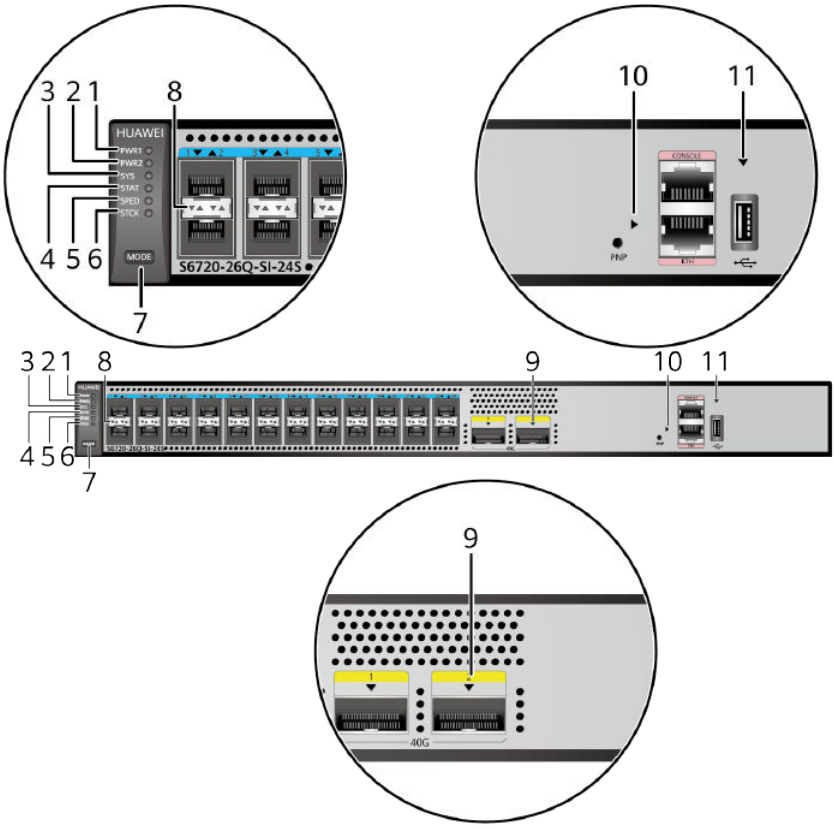

NOTE

The S6720-SI series switches provide a command for setting fault indicators, which help field maintenance personnel find a faulty switch quickly.

The SYS indicator and mode indicators (STAT, SPED, and STCK) are used as fault indicators of a switch. If the switch fails, its SYS indicator and mode indicators can be configured to blink red fast so that field maintenance personnel can find this faulty switch.

Table 4-56 Description of indicators on the switch

No.	Indicator	Name	Color	Status	Description
1	PWR 1	Power module indicator	-	Off	No power module is available in power module slot 1, or the switch has only one power module but the power module does not work normally.
			Green	Steady on	A power module is installed in power module slot 1 and is working normally.

No.	Indicator	Name	Color	Status	Description
			Yellow	Steady on	The switch has two power modules installed. Any of the following situations occurs in power module slot 1: ● A power module is available in this slot but its power switch is in the OFF position. ● A power module is available in this slot but it is not connected to a power source. ● The power module in this slot has failed.
2	PWR 2	Power module indicator	-	Off	No power module is available in power module slot 2, or the switch has only one power module but the power module does not work normally.
			Green	Steady on	A power module is installed in power module slot 2 and is working normally.
			Yellow	Steady on	The switch has two power modules installed. Any of the following situations occurs in power module slot 2: ● A power module is available in this slot but its power switch is in the OFF position. ● A power module is available in this slot but it is not connected to a power source. ● The power module in this slot has failed.
3	SYS	System status indicator	-	Off	The system is not running.
			Green	Fast blinking	The system is starting.
			Green	Slow blinking	The system is running normally.
			Red	Steady on	The system does not work normally after registration, or a fan alarm or temperature alarm has been generated.
4	STAT	Status indicator	-	Off	The status mode is not selected.

No.	Indicator	Name	Color	Status	Description
			Green	Steady on	The status mode (default mode) is selected. If the status mode is selected, the service port indicator shows the port link or activity state.
5	SPED	Speed indicator	-	Off	The speed mode is not selected.
			Green	Steady on	The service port indicators show the port speeds. After 45 seconds, the service port indicators automatically restore to the status mode.
6	STCK	Stack indicator	-	Off	● If you are not changing the indicator mode (default): The switch is in stack standby or slave state or the stacking function is not enabled on the switch. ● If you are changing the indicator mode: The stack mode is not selected.
			Green	Steady on	The switch is a standby or slave switch in a stack, and the service port indicators show the stack ID of the switch.
			Green	Blinking	● If you are not changing the indicator mode (default): The switch is a stack master switch or a standalone switch with the stacking function enabled. ● If you are changing the indicator mode: The switch is the master switch in a stack or a standalone switch, and the service port indicators show the stack ID of the master switch. After 45 seconds, the service port indicators automatically restore to the status mode.

No.	Indicator	Name	Color	Status	Description
7	MODE	Mode switch button	-	-	• When you press this button once, the service port indicators change to the speed mode and show the speed of each service port. • When you press this button a second time, the service port indicators change to the stack mode and show the stack ID of the local switch. • When you press this button a third time, the service port indicators restore to the default mode, and the STAT indicator turns green. If you do not press the MODE button within 45 seconds, the service port indicators restore to the default mode. In this case, the STAT indicator is steady green, the SPED indicator is off, and the STCK indicator is off or blinking green.
8	-	10GE service port indicator (two indicators for each port)	Meanings of service port indicators vary in different modes. For details, see **Table 4-57**.		
9	-	40GE service port indicator (one indicator for each port)	Meanings of service port indicators vary in different modes. For details, see **Table 4-58**.		
10	-	ETH port indicator	-	Off	The ETH port is not connected.
			Green	Steady on	The ETH port is connected.
			Green	Blinking	The ETH port is sending or receiving data.

No.	Indicator	Name	Color	Status	Description
11	-	USB-based deployment indicator	-	Off	● No USB flash drive is connected to the switch. ● The USB port is damaged. ● The indicator is damaged. ● The USB flash drive does not have any configuration file and cannot be used for deployment. ● The switch has been upgraded using the USB flash drive and is restarting.
			Green	Steady on	A USB-based deployment has been completed.
			Green	Blinking	The system is reading data from the USB flash drive.
			Yellow	Steady on	The switch has copied all the required files and completed the file check. The USB flash drive can be removed from the switch.
			Red	Blinking	An error has occurred when the system is executing the configuration file or reading data from the USB flash drive.

Table 4-57 Description of 10GE service port indicators in different modes (two indicators for each port)

Display Mode	Color	Status	Description
Status	-	Off	The port is not connected or has been shut down.
	Green	Steady on	A link has been established on the port.
	Yellow	Blinking	The port is sending or receiving data.
Speed	-	Off	The port is not connected or has been shut down.
	Green and yellow	Steady on	1000M/10GE port: The port is operating at 1000 Mbit/s.

Display Mode	Color	Status	Description
	Green and yellow	Blinking	1000M/10GE port: The port is operating at 10 Gbit/s.
Stack	-	Off	Port indicators do not show the stack ID of the switch.
	Green and yellow	Steady on	The switch is not the master switch in a stack. ● If the indicator of a port is steady on, the number of this port is the stack ID of the switch. ● If the indicators of ports 1 to 9 are steady on, the stack ID of the switch is 0.
	Green and yellow	Blinking	The switch is the master switch in a stack. ● If the indicator of a port is blinking, the number of this port is the stack ID of the switch. ● If the indicators of ports 1 to 9 are blinking, the stack ID of the switch is 0.

Table 4-58 Description of 40GE service port indicators in different modes (one indicator for each port)

Display Mode	Color	Status	Description
Status	-	Off	The port is not connected or has been shut down.
	Green	Steady on	A link has been established on the port.
	Green	Blinking	The port is sending or receiving data.
Speed	-	Off	The port is not connected or has been shut down.
	Green	Steady on	The port is operating at 10 Gbit/s.
	Green	Blinking	The port is operating at 40 Gbit/s.

Power Supply Configuration

The S6720-26Q-SI-24S-AC uses pluggable power modules. It can be configured with a single power module or double power modules for 1+1 power redundancy. Pluggable AC and DC power modules can be used together in the same switch.

Figure 4-25 shows the power supply connections of dual DC power modules. After DC power is transmitted to the PWR module, the PWR module provides 12 V output voltage, and the motherboard provides power for the entire device.

Figure 4-25 Power supply connections of dual DC power modules

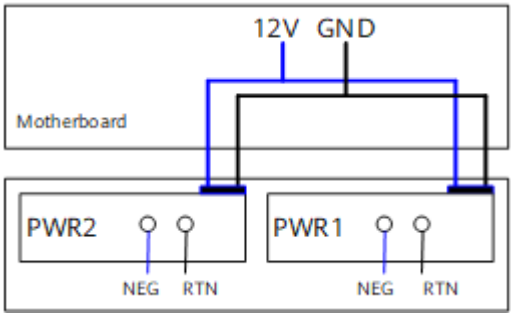

NEG: negative wire RTN: positive wire GND: 12 V reference ground

Figure 4-26 shows the power supply connections of dual AC power modules. After AC power is transmitted to the PWR module, the PWR module provides 12 V output voltage, and the motherboard provides power for the entire device.

Figure 4-26 Power supply connections of dual AC power modules

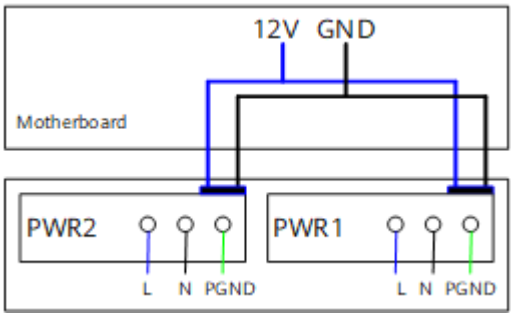

L: Live wire N: Neutral wire PGND: Protection ground wire GND: 12 V reference ground

Heat Dissipation

The S6720-26Q-SI-24S-AC uses a pluggable fan module for forced air cooling. Air flows in from the left, right, and front sides, and exhausts from the rear panel.

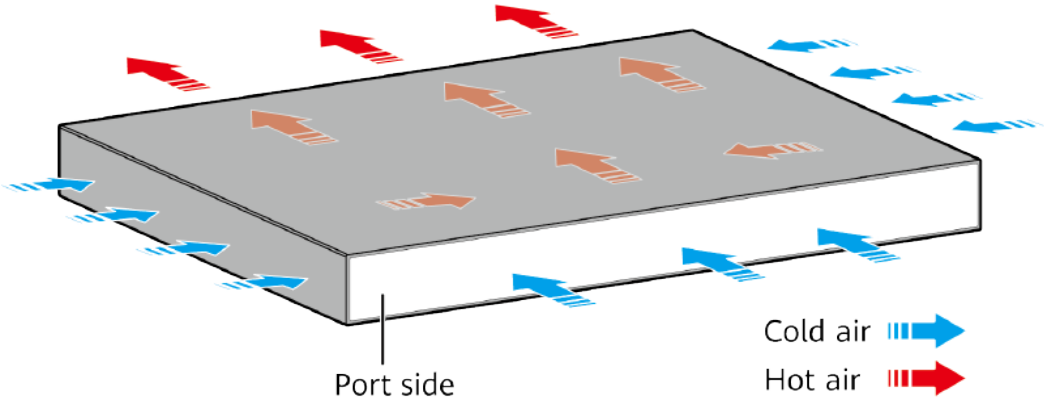

NOTE

This figure only shows the airflow direction and does not depict the actual device.

Technical Specifications

Table 4-59 lists specifications of the S6720-26Q-SI-24S-AC.

Table 4-59 Technical specifications

Item	Description
Memory (RAM)	1 GB
Flash	512 MB in total. To view the available flash memory size, run the **display version** command.
Mean time between failures (MTBF)	41.9 years
Mean time to repair (MTTR)	2 hours
Availability	> 0.99999
Service port surge protection	NA
Power supply surge protection	• Using AC power modules: ±6 kV in differential mode, ±6 kV in common mode • Using DC power modules: ±1 kV in differential mode, ±2 kV in common mode
Dimensions (H x W x D)	• Basic dimensions (excluding the parts protruding from the body): 44.4 mm x 442.0 mm x 425.0 mm (1.75 in. x 17.4 in. x 16.73 in.) • Maximum dimensions (the depth is the distance from ports on the front panel to the handle on the rear panel): 44.4 mm x 442.0 mm x 451.3 mm (1.75 in. x 17.4 in. x 17.77 in.)

Item	Description
Weight (including package)	8.9 kg (19.62 lb)
Stack ports	• Any 10GE SFP+ ports (a maximum of 16 physical ports) • Any 40GE QSFP+ ports (a maximum of 2 physical ports)
RTC	Supported
RPS	Not supported
PoE	Not supported
Rated voltage range	100 V AC to 240 V AC, 50/60 Hz -48 V DC to -60 V DC
Maximum voltage range	90 V AC to 264 V AC, 47 Hz to 63 Hz -36 V DC to -72 V DC
Maximum power consumption (100% throughput, full speed of fans)	97 W
Typical power consumption (30% of traffic load, tested according to ATIS standard)	68.4 W
Operating temperature	0°C to 45°C (32°F to 113°F) at an altitude of 0-1800 m (0-5906 ft.) **NOTE** When the altitude is 1800-5000 m (5906-16404 ft.), the highest operating temperature reduces by 1°C (1.8°F) every time the altitude increases by 220 m (722 ft.).

Item	Description
Short-term operating temperature	-5°C to +50°C (23°F to 122°F) at an altitude of 0-1800 m (0-5906 ft.) **NOTE** When the altitude is 1800-5000 m (5906-16404 ft.), the highest operating temperature reduces by 1°C (1.8°F) every time the altitude increases by 220 m (722 ft.). The equipment can operate beyond the normal operating temperature range for a short-term period, but the following conditions must be met: ● The equipment operates at a temperature of over 45°C (113°F) consecutively for at most 96 hours in one year. ● The equipment operates at a temperature of over 45°C (113°F) for a total of no more than 360 hours in one year. ● The equipment operates at a temperature of over 45°C (113°F) for no more in 15 times in one year. The equipment may be damaged or experience unexpected exceptions if any of the preceding limits is exceeded. The equipment cannot start when the temperature is lower than 0°C (32°F). The maximum distance of optical modules used in these conditions cannot exceed 10 km.
Storage temperature	-40°C to +70°C (-40°F to +158°F)
Noise under normal temperature (27°C, sound power)	< 57 dB(A)
Relative humidity	5% to 95%, noncondensing
Operating altitude	● AC power modules configured: 0-5000 m (0-16404 ft.) ● DC power modules configured: 0-2000 m (0-6562 ft.)
Certification	● EMC certification ● Safety certification ● Manufacturing certification
Part number	98010690

4.7.2 S6720-32X-SI-32S-AC

Version Mapping

Table 4-60 lists the mapping between the S6720-32X-SI-32S-AC chassis and software versions.

Table 4-60 Version mapping

Series	Model	Software Version
S6720-SI	S6720-32X-SI-32S-AC	V200R011C00 to V200R019C10 versions

Appearance and Structure

Figure 4-27 S6720-32X-SI-32S-AC appearance

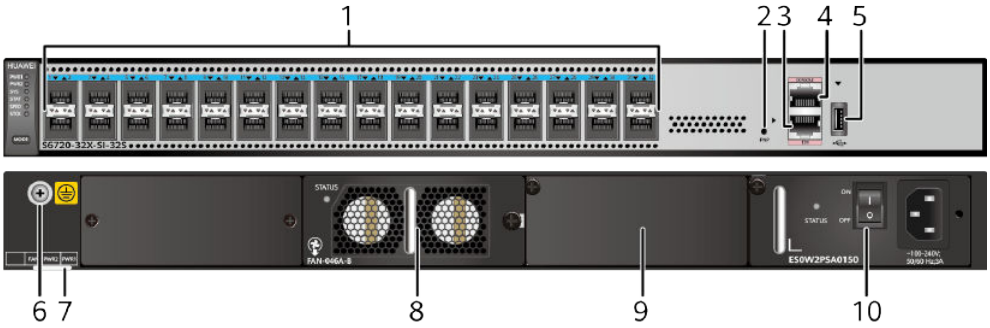

1	Thirty-two 10GE SFP+ ports Applicable modules and cables: • **GE optical module** • **GE-CWDM optical module** • **GE-DWDM optical module** • **GE copper module (100M/1000M auto-sensing)** • **10GE SFP+ optical module (OSXD22N00 not supported)** • **10GE-CWDM optical module** • **10GE-DWDM optical module** • **1 m, 3 m, 5 m, and 10 m SFP+ high-speed copper cables** • **3 m and 10 m SFP+ AOC cables** • **0.5 m and 1.5 m SFP+ dedicated stack copper cables (the last 16 ports are supported, used for zero-configuration stacking, supported in V200R011C10 and later versions)**	2	One PNP button **NOTICE** Applicable in V200R012C00 and later versions: To restore the factory settings and reset the switch, hold down the button for at least 6 seconds. To reset the switch, press the button. Resetting the switch will cause service interruption. Exercise caution when you press the PNP button.
3	One ETH management port	4	One console port

5	One USB port	6	Ground screw **NOTE** It is used with a **ground cable**.
7	ESN label **NOTE** You can draw it out to view the ESN and MAC address of the switch.	8	Fan slot **NOTE** Applicable fan module: **6.3 FAN-046A-B Fan Module**
9	Power module slot 2 **NOTE** Applicable power modules: • **150 W AC power module** • **150 W DC power module**	10	Power module slot 1 **NOTE** Applicable power modules: • **150 W AC power module** • **150 W DC power module**

Port Description

10GE SFP+ port

A 10GE SFP+ Ethernet optical port supports auto-sensing to 1000 Mbit/s. It sends and receives service data at 1000 Mbit/s or 10 Gbit/s. **Table 4-61** describes the attributes of a 10GE SFP+ Ethernet optical port.

Table 4-61 Attributes of a 10GE SFP+ port

Attribute	Description
Connector type	LC/PC
Optical port attributes	Depend on the optical module used
Standards compliance	IEEE802.3ae
Working mode	GE/10GE auto-sensing

Console port

The console port is connected to a console for on-site configuration. The port must use a **console cable**. The console port is used when a switch is powered on for the first time. For details about the attributes of a console port, see **Table 4-62**.

Table 4-62 Attributes of a console port

Attribute	Description
Connector type	RJ45

Attribute	Description
Standards compliance	RS-232
Working mode	Duplex Universal Asynchronous Receiver/Transmitter (UART)
Baud rate	9600 bit/s, 19200 bit/s, 38400 bit/s, 57600 bit/s, or 115200 bit/s Default value: 9600 bit/s

ETH management port

You can connect a switch to a configuration terminal or network management workstation through the ETH management port to configure the switch locally or remotely. The port must use an **Ethernet cable**. You can choose to download the software package through the ETH management port in the BootLoad menu. File transfer through the ETH management port is faster than transfer through the console port. **Table 4-63** describes the attributes of an ETH management port.

Table 4-63 Attributes of an ETH management port

Attribute	Description
Connector type	RJ45
Standards compliance	IEEE802.3
Working mode	10/100 Mbit/s auto-sensing
Maximum transmission distance	100 m

In V200R012C00 and later versions, you can log in to the switch that contains the ETH management port for the first time through the ETH port. For details, see "First Login to a Switch" in the *Configuration Guide - Basic Configuration*. If you have logged in to the device for the first time by pressing and holding the MODE button for 6 seconds or longer and saved the configuration, the default configuration on the ETH port will be cleared. In this case, you cannot log in to the switch for the first time through the ETH port. You are advised to log in to the switch for the first time through the ETH port.

USB port

The USB port can have a USB flash drive connected to upgrade the switch, or transfer configuration files or other files. The USB port can only connect to a USB flash drive that complies with USB 2.0.

NOTE

USB flash drives from different vendors differ in model compatibility and drivers. If a USB flash drive cannot be used, try to replace it with another one from a mainstream vendor. Switches support a maximum of 128 GB USB flash drives.

Indicator Description

The S6720-32X-SI-32S-AC has similar indicators to those of the S6720-26Q-SI-24S-AC, except that the S6720-32X-SI-32S-AC has no 40GE port indicators. For details, see **Indicator Description**.

Power Supply Configuration

The S6720-32X-SI-32S-AC uses pluggable power modules. It can be configured with a single power module or double power modules for 1+1 power redundancy. Pluggable AC and DC power modules can be used together in the same switch.

Figure 4-28 shows the power supply connections of dual DC power modules. After DC power is transmitted to the PWR module, the PWR module provides 12 V output voltage, and the motherboard provides power for the entire device.

Figure 4-28 Power supply connections of dual DC power modules

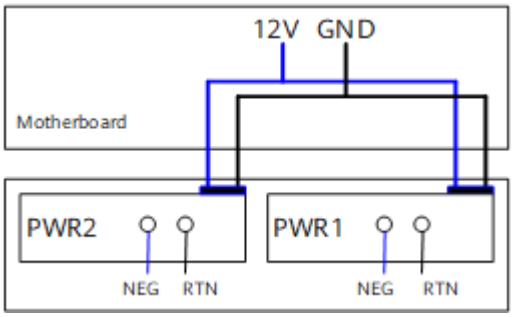

NEG: negative wire RTN: positive wire GND: 12 V reference ground

Figure 4-29 shows the power supply connections of dual AC power modules. After AC power is transmitted to the PWR module, the PWR module provides 12 V output voltage, and the motherboard provides power for the entire device.

Figure 4-29 Power supply connections of dual AC power modules

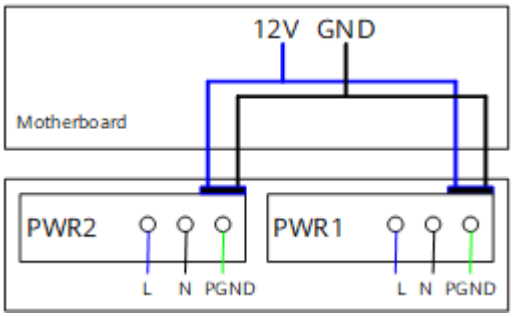

L: Live wire N: Neutral wire PGND: Protection ground wire GND: 12 V reference ground

Heat Dissipation

The S6720-32X-SI-32S-AC uses a pluggable fan module for forced air cooling. Air flows in from the left, right, and front sides, and exhausts from the rear panel.

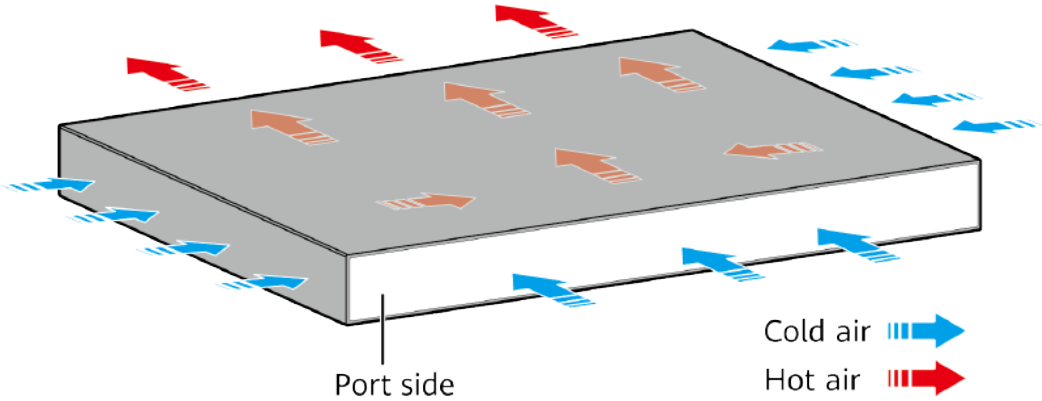

NOTE

This figure only shows the airflow direction and does not depict the actual device.

Technical Specifications

Table 4-64 lists specifications of the S6720-32X-SI-32S-AC.

Table 4-64 Technical specifications

Item	Description
Memory (RAM)	1 GB
Flash	512 MB in total. To view the available flash memory size, run the **display version** command.

Item	Description
Mean time between failures (MTBF)	46.7 years
Mean time to repair (MTTR)	2 hours
Availability	> 0.99999
Service port surge protection	NA
Power supply surge protection	• Using AC power modules: ±6 kV in differential mode, ±6 kV in common mode • Using DC power modules: ±1 kV in differential mode, ±2 kV in common mode
Dimensions (H x W x D)	• Basic dimensions (excluding the parts protruding from the body): 44.4 mm x 442.0 mm x 425.0 mm (1.75 in. x 17.4 in. x 16.73 in.) • Maximum dimensions (the depth is the distance from ports on the front panel to the handle on the rear panel): 44.4 mm x 442.0 mm x 451.3 mm (1.75 in. x 17.4 in. x 17.77 in.)
Weight (including package)	8.9 kg (19.62 lb)
Stack ports	Any 10GE SFP+ ports (a maximum of 16 physical ports)
RTC	Supported
RPS	Not supported
PoE	Not supported
Rated voltage range	100 V AC to 240 V AC, 50/60 Hz -48 V DC to -60 V DC
Maximum voltage range	90 V AC to 264 V AC, 47 Hz to 63 Hz -36 V DC to -72 V DC
Maximum power consumption (100% throughput, full speed of fans)	104.6 W

Item	Description
Typical power consumption (30% of traffic load, tested according to ATIS standard)	72.6 W
Operating temperature	0°C to 45°C (32°F to 113°F) at an altitude of 0-1800 m (0-5906 ft.) **NOTE** When the altitude is 1800-5000 m (5906-16404 ft.), the highest operating temperature reduces by 1°C (1.8°F) every time the altitude increases by 220 m (722 ft.).
Short-term operating temperature	-5°C to +50°C (23°F to 122°F) at an altitude of 0-1800 m (0-5906 ft.) **NOTE** When the altitude is 1800-5000 m (5906-16404 ft.), the highest operating temperature reduces by 1°C (1.8°F) every time the altitude increases by 220 m (722 ft.). The equipment can operate beyond the normal operating temperature range for a short-term period, but the following conditions must be met: ● The equipment operates at a temperature of over 45°C (113°F) consecutively for at most 96 hours in one year. ● The equipment operates at a temperature of over 45°C (113°F) for a total of no more than 360 hours in one year. ● The equipment operates at a temperature of over 45°C (113°F) for no more in 15 times in one year. The equipment may be damaged or experience unexpected exceptions if any of the preceding limits is exceeded. The equipment cannot start when the temperature is lower than 0°C (32°F). The maximum distance of optical modules used in these conditions cannot exceed 10 km.
Storage temperature	-40°C to +70°C (-40°F to +158°F)
Noise under normal temperature (27°C, sound power)	< 60.5 dB(A)
Relative humidity	5% to 95%, noncondensing
Operating altitude	● AC power modules configured: 0-5000 m (0-16404 ft.) ● DC power modules configured: 0-2000 m (0-6562 ft.)
Certification	● EMC certification ● Safety certification ● Manufacturing certification

Item	Description
Part number	98010695

4.7.3 S6720-32C-SI-AC

Version Mapping

Table 4-65 lists the mapping between the S6720-32C-SI-AC chassis and software versions.

Table 4-65 Version mapping

Series	Model	Software Version
S6720-SI	S6720-32C-SI-AC	V200R011C00 to V200R019C10 versions

Appearance and Structure

Figure 4-30 S6720-32C-SI-AC appearance

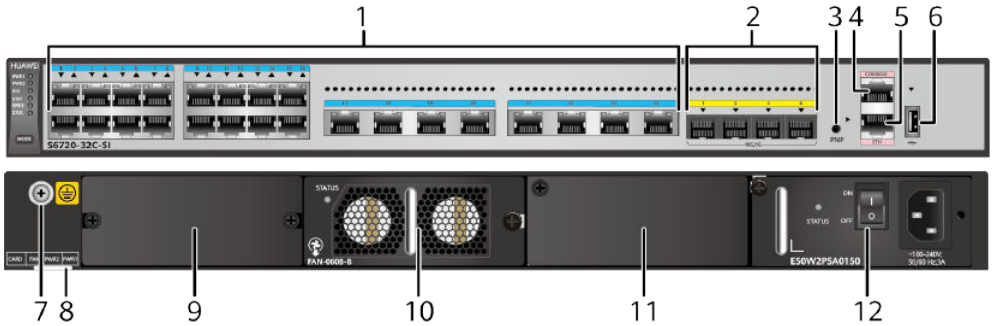

1	Twenty-four 100M/1000M/2.5GE/5GE/10GE BASE-T ports (MultiGE port)	2	Four 10GE SFP+ ports Applicable modules and cables: • **GE optical module** • **GE-CWDM optical module** • **GE-DWDM optical module** • **GE copper module (100M/1000M auto-sensing)** • **10GE SFP+ optical module (OSXD22N00 not supported)** • **10GE-CWDM optical module** • **10GE-DWDM optical module** • **1 m, 3 m, 5 m, and 10 m SFP+ high-speed copper cables** • **3 m and 10 m SFP+ AOC cables** • **0.5 m and 1.5 m SFP+ dedicated stack copper cables (used for zero-configuration stacking, supported in V200R011C10 and later versions)** **NOTE** The four 10GE SFP+ ports on the front panel cannot be used simultaneously with ports on the rear card (except the 4-port 10GE rear card). If a rear card other than a 4-port 10GE rear card is installed in the switch, only the ports on the front panel can be used by default. • V200R011 version: To use the port on the rear card, run the **set device port-on-card enable** command. Then the four 10GE SFP+ ports on the front panel cannot be used. • V200R012 and later versions: To use the port on the rear card, run the **undo set device port-config-mode port-on-board enable** command. Then the four 10GE SFP+ ports on the front panel cannot be used.

3	One PNP button **NOTICE** Applicable in V200R012C00 and later versions: To restore the factory settings and reset the switch, hold down the button for at least 6 seconds. To reset the switch, press the button. Resetting the switch will cause service interruption. Exercise caution when you press the PNP button.	4	One console port
5	One ETH management port	6	One USB port
7	Ground screw **NOTE** It is used with a **ground cable**.	8	ESN label **NOTE** You can draw it out to view the ESN and MAC address of the switch.
9	Rear card slot **NOTE** Cards supported: • **ES5D21Q02Q00** • **ES5D21X04S01**	10	Fan slot **NOTE** Applicable fan module: **6.5 FAN-060B-B (Fan box (B, FAN panel side exhaust))**
11	Power module slot 2 **NOTE** Applicable power modules: • **150 W AC power module** • **150 W DC power module**	12	Power module slot 1 **NOTE** Applicable power modules: • **150 W AC power module** • **150 W DC power module**

Port Description

100M/1000M/2.5GE/5GE/10GE BASE-T port (MultiGE port)

A 100M/1000M/2.5GE/5GE/10GE BASE-T port (MultiGE port) sends and receives service data at 100 Mbit/s, 1 Gbit/s, 2.5 Gbit/s, 5 Gbit/s, or 10 Gbit/s, and must use an **Ethernet cable**. If the 2.5 Gbit/s or 5 Gbit/s speed is required, the port must use an Ethernet cable of Cat5e or higher category. If the 10 Gbit/s speed is required, the port must use an Ethernet cable of Cat6A F/UTP or higher category. **Table 4-66** describes the attributes of a 100M/1000M/2.5GE/5GE/10GE BASE-T port.

Table 4-66 Attributes of a 100M/1000M/2.5GE/5GE/10GE BASE-T port

Attribute	Description
Connector type	RJ45

Attribute	Description
Standards compliance	IEEE802.3u, IEEE802.3ab, IEEE802.3bz, IEEE802.3an, mgbase-t
Working Mode	100/1000/2500/5000/10000 Mbit/s auto-sensing

Table 4-67 lists the maximum transmission distances of different cables on MultiGE ports.

Table 4-67 Maximum transmission distances of different cables on MultiGE ports

Cable Type (6-a-1 Bundle)	MultiGE Port (Different Rates)			
	24*100M/1000M	24x2.5GE	24x5GE	24x10GE
Category 5e unshielded twisted pair (Cat5e UTP)	100 m	100 m	• 55 m • 100 m (6-a-1 bundle only for the first 30 m) Not recommended due to high risk	Not supported
Category 5e shielded twisted pair (Cat5e STP)	100 m	100 m	100 m	Not supported
Category 6 unshielded twisted pair (Cat6 UTP)	100 m	100 m	100 m Not recommended due to high risk	Not supported
Category 6 shielded twisted pair (Cat6 STP)	100 m	100 m	100 m	Not supported
Category 6A unshielded twisted pair (Cat6A U/UTP)	100 m	100 m	100 m Not recommended due to high risk	Not supported

Cable Type (6-a-1 Bundle)	MultiGE Port (Different Rates)			
	24*100M/ 1000M	24x2.5GE	24x5GE	24x10GE
Category 6A foiled/ unshielded twisted pair (Cat6A F/UTP)	100 m	100 m	100 m	100 m
Category 6A shielded twisted pair (Cat6A STP)	100 m	100 m	100 m	100 m
Category 7 twisted pair (Cat7)	100 m	100 m	100 m	100 m

NOTE

6-a-1 stands for the six-around-one cable bundle mode, with one cable in the center and six cables bundled evenly around it.

Some cables pose high risks and are not recommended for the following reasons:

- 802.3bz requires that the ALSNR value for alien crosstalk between Ethernet cables be greater than 0, but the standards for Cat5e and Cat6 unshielded twisted pairs do not specify the required ALSNR value. Therefore, such cables may not meet the crosstalk requirement in 802.3bz, causing severe problems such as continuous packet loss.
- According the cabling specification TIA TSB-5021, using Cat5e and Cat6 cables for 5G poses high risks.
- Currently, no clear onsite testing or evaluation method is available for checking whether ALSNR of cables conforms to 802.3bz.

If Cat5e and Cat6 unshielded twisted pairs do not meet the 5G requirement, you are advised to replace them with shielded twisted pairs or reduce the rate of ports to 2.5G.

If Cat5E, Cat6, or Cat6A unshielded twisted pairs are used on electrical ports working at 10 Gbit/s, severe problems such as continuous packet loss or port flapping may occur.

10GE SFP+ port

A 10GE SFP+ Ethernet optical port supports auto-sensing to 1000 Mbit/s. It sends and receives service data at 1000 Mbit/s or 10 Gbit/s. **Table 4-68** describes the attributes of a 10GE SFP+ Ethernet optical port.

Table 4-68 Attributes of a 10GE SFP+ port

Attribute	Description
Connector type	LC/PC
Optical port attributes	Depend on the optical module used
Standards compliance	IEEE802.3ae
Working mode	GE/10GE auto-sensing

Console port

The console port is connected to a console for on-site configuration. The port must use a **console cable**. The console port is used when a switch is powered on for the first time. For details about the attributes of a console port, see **Table 4-69**.

Table 4-69 Attributes of a console port

Attribute	Description
Connector type	RJ45
Standards compliance	RS-232
Working mode	Duplex Universal Asynchronous Receiver/Transmitter (UART)
Baud rate	9600 bit/s, 19200 bit/s, 38400 bit/s, 57600 bit/s, or 115200 bit/s Default value: 9600 bit/s

ETH management port

You can connect a switch to a configuration terminal or network management workstation through the ETH management port to configure the switch locally or remotely. The port must use an **Ethernet cable**. You can choose to download the software package through the ETH management port in the BootLoad menu. File transfer through the ETH management port is faster than transfer through the console port. **Table 4-70** describes the attributes of an ETH management port.

Table 4-70 Attributes of an ETH management port

Attribute	Description
Connector type	RJ45
Standards compliance	IEEE802.3
Working mode	10/100 Mbit/s auto-sensing
Maximum transmission distance	100 m

In V200R012C00 and later versions, you can log in to the switch that contains the ETH management port for the first time through the ETH port. For details, see "First Login to a Switch" in the *Configuration Guide - Basic Configuration*. If you have logged in to the device for the first time by pressing and holding the MODE button for 6 seconds or longer and saved the configuration, the default configuration on the ETH port will be cleared. In this case, you cannot log in to

the switch for the first time through the ETH port. You are advised to log in to the switch for the first time through the ETH port.

USB port

The USB port can have a USB flash drive connected to upgrade the switch, or transfer configuration files or other files. The USB port can only connect to a USB flash drive that complies with USB 2.0.

NOTE

USB flash drives from different vendors differ in model compatibility and drivers. If a USB flash drive cannot be used, try to replace it with another one from a mainstream vendor. Switches support a maximum of 128 GB USB flash drives.

Indicator Description

The S6720-32C-SI-AC has similar indicators to those of the S6720-32C-PWH-SI-AC, except that the S6720-32C-SI-AC does not have a PoE indicator. For details, see **Indicator Description**.

Power Supply Configuration

The S6720-32C-SI-AC uses pluggable power modules. It can be configured with a single power module or double power modules for 1+1 power redundancy. Pluggable AC and DC power modules can be used together in the same switch.

Figure 4-31 shows the power supply connections of dual DC power modules. After DC power is transmitted to the PWR module, the PWR module provides 12 V output voltage, and the motherboard provides power for the entire device.

Figure 4-31 Power supply connections of dual DC power modules

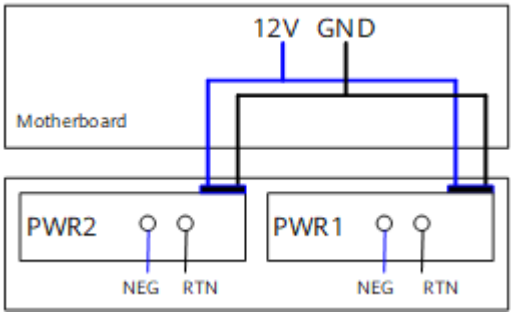

NEG: negative wire RTN: positive wire GND: 12 V reference ground

Figure 4-32 shows the power supply connections of dual AC power modules. After AC power is transmitted to the PWR module, the PWR module provides 12 V output voltage, and the motherboard provides power for the entire device.

Figure 4-32 Power supply connections of dual AC power modules

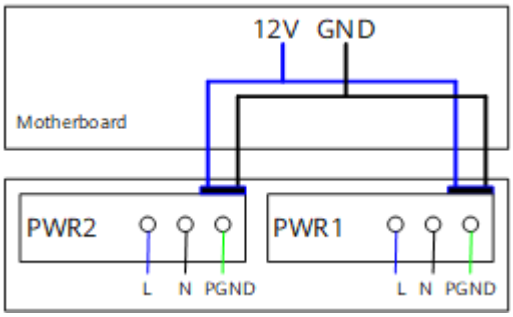

L: Live wire N: Neutral wire PGND: Protection ground wire GND: 12 V reference ground

Heat Dissipation

The S6720-32C-SI-AC uses a pluggable fan module for forced air cooling. Air flows in from the left, right, and front sides, and exhausts from the rear panel.

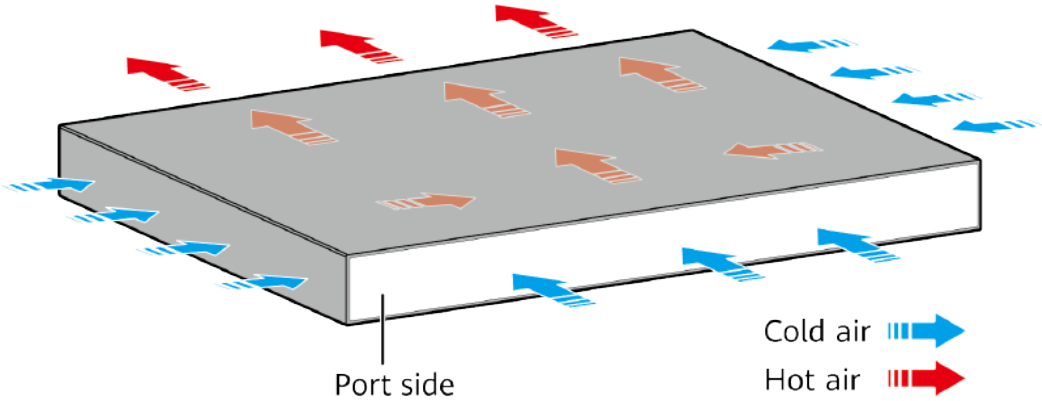

NOTE

This figure only shows the airflow direction and does not depict the actual device.

Technical Specifications

Table 4-71 lists technical specifications of the S6720-32C-SI-AC.

Table 4-71 Technical specifications

Item	Description
Memory (RAM)	1 GB
Flash	512 MB in total. To view the available flash memory size, run the **display version** command.

Item	Description
Mean time between failures (MTBF)	27.4 years
Mean time to repair (MTTR)	2 hours
Availability	> 0.99999
Service port surge protection	Common mode: ±7 kV
Power supply surge protection	• Using AC power modules: ±6 kV in differential mode, ±6 kV in common mode • Using DC power modules: ±1 kV in differential mode, ±2 kV in common mode
Dimensions (H x W x D)	• Basic dimensions (excluding the parts protruding from the body): 44.4 mm x 442.0 mm x 425.0 mm (1.75 in. x 17.4 in. x 16.73 in.) • Maximum dimensions (the depth is the distance from ports on the front panel to the handle on the rear panel): 44.4 mm x 442.0 mm x 451.3 mm (1.75 in. x 17.4 in. x 17.77 in.)
Weight (including package)	8.7 kg (19.18 lb)
Stack ports	Any MultiGE, 10GE SFP+, or 40GE QSFP+ ports (a maximum of 16 physical ports)
RTC	Supported
RPS	Not supported
PoE	Not supported
Rated voltage range	100 V AC to 240 V AC, 50/60 Hz -48 V DC to -60 V DC
Maximum voltage range	90 V AC to 264 V AC, 47 Hz to 63 Hz -36 V DC to -72 V DC
Maximum power consumption (100% throughput, full speed of fans)	117.62 W (without card)

Item	Description
Typical power consumption (30% of traffic load, tested according to ATIS standard)	93 W (without card)
Operating temperature	0°C to 45°C (32°F to 113°F) at an altitude of 0-1800 m (0-5906 ft.) **NOTE** When the altitude is 1800-5000 m (5906-16404 ft.), the highest operating temperature reduces by 1°C (1.8°F) every time the altitude increases by 220 m (722 ft.).
Short-term operating temperature	-5°C to +50°C (23°F to 122°F) at an altitude of 0-1800 m (0-5906 ft.) **NOTE** When the altitude is 1800-5000 m (5906-16404 ft.), the highest operating temperature reduces by 1°C (1.8°F) every time the altitude increases by 220 m (722 ft.). The equipment can operate beyond the normal operating temperature range for a short-term period, but the following conditions must be met: ● The equipment operates at a temperature of over 45°C (113°F) consecutively for at most 96 hours in one year. ● The equipment operates at a temperature of over 45°C (113°F) for a total of no more than 360 hours in one year. ● The equipment operates at a temperature of over 45°C (113°F) for no more in 15 times in one year. The equipment may be damaged or experience unexpected exceptions if any of the preceding limits is exceeded. The equipment cannot start when the temperature is lower than 0°C (32°F). The maximum distance of optical modules used in these conditions cannot exceed 10 km.
Storage temperature	-40°C to +70°C (-40°F to +158°F)
Noise under normal temperature (27°C, sound power)	< 62.3 dB(A)
Relative humidity	5% to 95%, noncondensing
Operating altitude	● AC power modules configured: 0-5000 m (0-16404 ft.) ● DC power modules configured: 0-2000 m (0-6562 ft.)
Certification	● EMC certification ● Safety certification ● Manufacturing certification

Item	Description
Part number	98010715

4.7.4 S6720-32C-SI-DC

Version Mapping

Table 4-72 lists the mapping between the S6720-32C-SI-DC and software versions.

Table 4-72 Version mapping

Series	Model	Software Version
S6720-SI	S6720-32C-SI-DC	V200R011C00 to V200R019C10 versions

Appearance and Structure

Figure 4-33 S6720-32C-SI-DC appearance

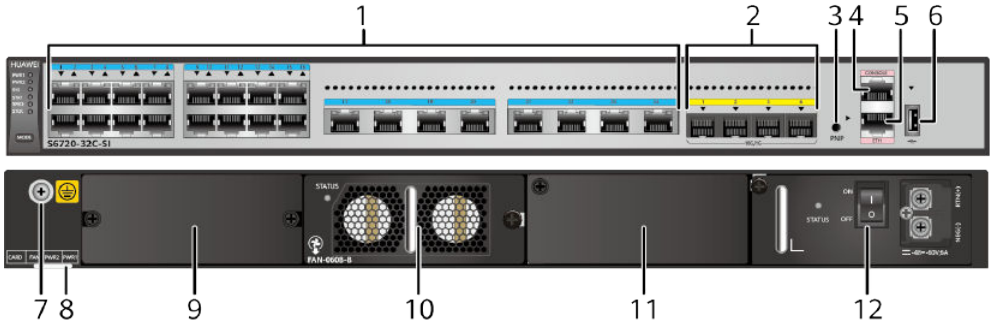

1	Twenty-four 100M/1000M/2.5GE/5GE/10GE BASE-T ports (MultiGE port)	2	Four 10GE SFP+ ports Applicable modules and cables: • **GE optical module** • **GE-CWDM optical module** • **GE-DWDM optical module** • **GE copper module (100M/1000M auto-sensing)** • **10GE SFP+ optical module (OSXD22N00 not supported)** • **10GE-CWDM optical module** • **10GE-DWDM optical module** • **1 m, 3 m, 5 m, and 10 m SFP+ high-speed copper cables** • **3 m and 10 m SFP+ AOC cables** • **0.5 m and 1.5 m SFP+ dedicated stack copper cables (used for zero-configuration stacking, supported in V200R011C10 and later versions)** **NOTE** The four 10GE SFP+ ports on the front panel cannot be used simultaneously with ports on the rear card (except the 4-port 10GE rear card). If a rear card other than a 4-port 10GE rear card is installed in the switch, only the ports on the front panel can be used by default. • V200R011 version: To use the port on the rear card, run the **set device port-on-card enable** command. Then the four 10GE SFP+ ports on the front panel cannot be used. • V200R012 and later versions: To use the port on the rear card, run the **undo set device port-config-mode port-on-board enable** command. Then the four 10GE SFP+ ports on the front panel cannot be used.

3	One PNP button **NOTICE** Applicable in V200R012C00 and later versions: To restore the factory settings and reset the switch, hold down the button for at least 6 seconds. To reset the switch, press the button. Resetting the switch will cause service interruption. Exercise caution when you press the PNP button.	4	One console port
5	One ETH management port	6	One USB port
7	Ground screw **NOTE** It is used with a **ground cable**.	8	ESN label **NOTE** You can draw it out to view the ESN and MAC address of the switch.
9	Rear card slot **NOTE** Cards supported: • **ES5D21Q02Q00** • **ES5D21X04S01**	10	Fan slot **NOTE** Applicable fan module: **6.5 FAN-060B-B (Fan box (B, FAN panel side exhaust))**
11	Power module slot 2 **NOTE** Applicable power modules: • **150 W AC power module** • **150 W DC power module**	12	Power module slot 1 **NOTE** Applicable power modules: • **150 W AC power module** • **150 W DC power module**

Port Description

100M/1000M/2.5GE/5GE/10GE BASE-T port (MultiGE port)

A 100M/1000M/2.5GE/5GE/10GE BASE-T port (MultiGE port) sends and receives service data at 100 Mbit/s, 1 Gbit/s, 2.5 Gbit/s, 5 Gbit/s, or 10 Gbit/s, and must use an **Ethernet cable**. If the 2.5 Gbit/s or 5 Gbit/s speed is required, the port must use an Ethernet cable of Cat5e or higher category. If the 10 Gbit/s speed is required, the port must use an Ethernet cable of Cat6A F/UTP or higher category. **Table 4-73** describes the attributes of a 100M/1000M/2.5GE/5GE/10GE BASE-T port.

Table 4-73 Attributes of a 100M/1000M/2.5GE/5GE/10GE BASE-T port

Attribute	Description
Connector type	RJ45

Attribute	Description
Standards compliance	IEEE802.3u, IEEE802.3ab, IEEE802.3bz, IEEE802.3an, mgbase-t
Working Mode	100/1000/2500/5000/10000 Mbit/s auto-sensing

Table 4-74 lists the maximum transmission distances of different cables on MultiGE ports.

Table 4-74 Maximum transmission distances of different cables on MultiGE ports

Cable Type (6-a-1 Bundle)	MultiGE Port (Different Rates)			
	24*100M/1000M	24x2.5GE	24x5GE	24x10GE
Category 5e unshielded twisted pair (Cat5e UTP)	100 m	100 m	• 55 m • 100 m (6-a-1 bundle only for the first 30 m) Not recommended due to high risk	Not supported
Category 5e shielded twisted pair (Cat5e STP)	100 m	100 m	100 m	Not supported
Category 6 unshielded twisted pair (Cat6 UTP)	100 m	100 m	100 m Not recommended due to high risk	Not supported
Category 6 shielded twisted pair (Cat6 STP)	100 m	100 m	100 m	Not supported
Category 6A unshielded twisted pair (Cat6A U/UTP)	100 m	100 m	100 m Not recommended due to high risk	Not supported

Cable Type (6-a-1 Bundle)	MultiGE Port (Different Rates)			
	24*100M/ 1000M	24x2.5GE	24x5GE	24x10GE
Category 6A foiled/ unshielded twisted pair (Cat6A F/UTP)	100 m	100 m	100 m	100 m
Category 6A shielded twisted pair (Cat6A STP)	100 m	100 m	100 m	100 m
Category 7 twisted pair (Cat7)	100 m	100 m	100 m	100 m

NOTE

6-a-1 stands for the six-around-one cable bundle mode, with one cable in the center and six cables bundled evenly around it.

Some cables pose high risks and are not recommended for the following reasons:

- 802.3bz requires that the ALSNR value for alien crosstalk between Ethernet cables be greater than 0, but the standards for Cat5e and Cat6 unshielded twisted pairs do not specify the required ALSNR value. Therefore, such cables may not meet the crosstalk requirement in 802.3bz, causing severe problems such as continuous packet loss.
- According the cabling specification TIA TSB-5021, using Cat5e and Cat6 cables for 5G poses high risks.
- Currently, no clear onsite testing or evaluation method is available for checking whether ALSNR of cables conforms to 802.3bz.

If Cat5e and Cat6 unshielded twisted pairs do not meet the 5G requirement, you are advised to replace them with shielded twisted pairs or reduce the rate of ports to 2.5G.

If Cat5E, Cat6, or Cat6A unshielded twisted pairs are used on electrical ports working at 10 Gbit/s, severe problems such as continuous packet loss or port flapping may occur.

10GE SFP+ port

A 10GE SFP+ Ethernet optical port supports auto-sensing to 1000 Mbit/s. It sends and receives service data at 1000 Mbit/s or 10 Gbit/s. **Table 4-75** describes the attributes of a 10GE SFP+ Ethernet optical port.

Table 4-75 Attributes of a 10GE SFP+ port

Attribute	Description
Connector type	LC/PC
Optical port attributes	Depend on the optical module used
Standards compliance	IEEE802.3ae
Working mode	GE/10GE auto-sensing

Console port

The console port is connected to a console for on-site configuration. The port must use a **console cable**. The console port is used when a switch is powered on for the first time. For details about the attributes of a console port, see **Table 4-76**.

Table 4-76 Attributes of a console port

Attribute	Description
Connector type	RJ45
Standards compliance	RS-232
Working mode	Duplex Universal Asynchronous Receiver/Transmitter (UART)
Baud rate	9600 bit/s, 19200 bit/s, 38400 bit/s, 57600 bit/s, or 115200 bit/s Default value: 9600 bit/s

ETH management port

You can connect a switch to a configuration terminal or network management workstation through the ETH management port to configure the switch locally or remotely. The port must use an **Ethernet cable**. You can choose to download the software package through the ETH management port in the BootLoad menu. File transfer through the ETH management port is faster than transfer through the console port. **Table 4-77** describes the attributes of an ETH management port.

Table 4-77 Attributes of an ETH management port

Attribute	Description
Connector type	RJ45
Standards compliance	IEEE802.3
Working mode	10/100 Mbit/s auto-sensing
Maximum transmission distance	100 m

In V200R012C00 and later versions, you can log in to the switch that contains the ETH management port for the first time through the ETH port. For details, see "First Login to a Switch" in the *Configuration Guide - Basic Configuration*. If you have logged in to the device for the first time by pressing and holding the MODE button for 6 seconds or longer and saved the configuration, the default configuration on the ETH port will be cleared. In this case, you cannot log in to

the switch for the first time through the ETH port. You are advised to log in to the switch for the first time through the ETH port.

USB port

The USB port can have a USB flash drive connected to upgrade the switch, or transfer configuration files or other files. The USB port can only connect to a USB flash drive that complies with USB 2.0.

NOTE

USB flash drives from different vendors differ in model compatibility and drivers. If a USB flash drive cannot be used, try to replace it with another one from a mainstream vendor. Switches support a maximum of 128 GB USB flash drives.

Indicator Description

The S6720-32C-SI-DC has similar indicators to those of the S6720-32C-PWH-SI-AC, except that the S6720-32C-SI-DC does not have a PoE indicator. For details, see **Indicator Description**.

Power Supply Configuration

The S6720-32C-SI-DC uses pluggable power modules. It can be configured with a single power module or double power modules for 1+1 power redundancy. Pluggable AC and DC power modules can be used together in the same switch.

Figure 4-34 shows the power supply connections of dual DC power modules. After DC power is transmitted to the PWR module, the PWR module provides 12 V output voltage, and the motherboard provides power for the entire device.

Figure 4-34 Power supply connections of dual DC power modules

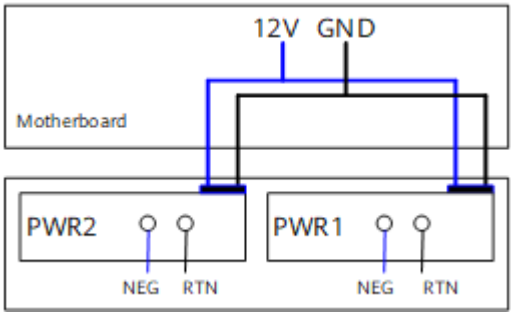

NEG: negative wire RTN: positive wire GND: 12 V reference ground

Figure 4-35 shows the power supply connections of dual AC power modules. After AC power is transmitted to the PWR module, the PWR module provides 12 V output voltage, and the motherboard provides power for the entire device.

Figure 4-35 Power supply connections of dual AC power modules

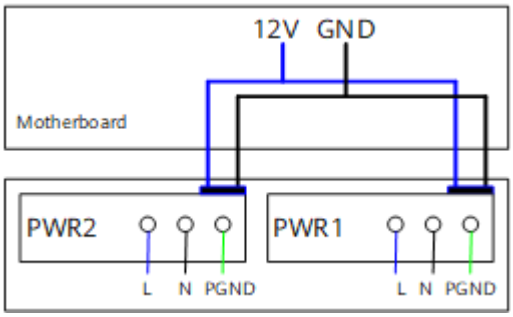

L: Live wire N: Neutral wire PGND: Protection ground wire GND: 12 V reference ground

Heat Dissipation

The S6720-32C-SI-DC uses a pluggable fan module for forced air cooling. Air flows in from the left, right, and front sides, and exhausts from the rear panel.

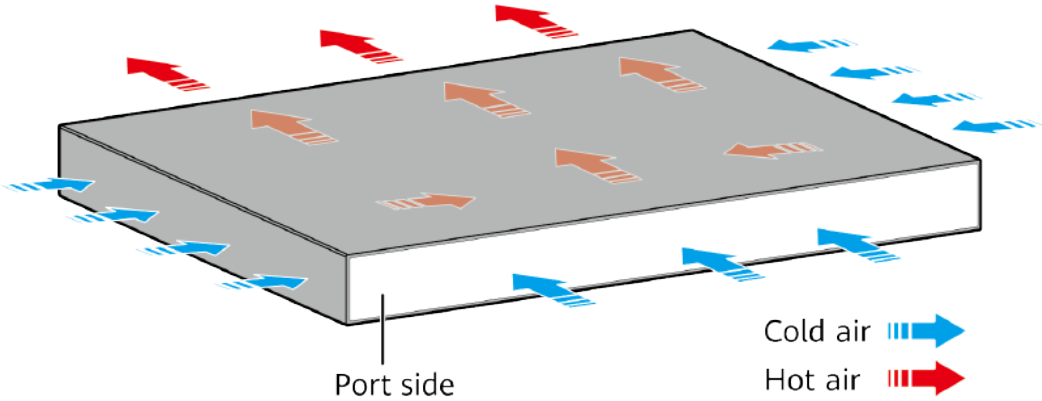

NOTE

This figure only shows the airflow direction and does not depict the actual device.

Technical Specifications

Table 4-78 lists specifications of the S6720-32C-SI-DC.

Table 4-78 Technical specifications

Item	Description
Memory (RAM)	1 GB
Flash	512 MB in total. To view the available flash memory size, run the **display version** command.

Item	Description
Mean time between failures (MTBF)	27.4 years
Mean time to repair (MTTR)	2 hours
Availability	> 0.99999
Service port surge protection	Common mode: ±7 kV
Power supply surge protection	• Using AC power modules: ±6 kV in differential mode, ±6 kV in common mode • Using DC power modules: ±1 kV in differential mode, ±2 kV in common mode
Dimensions (H x W x D)	• Basic dimensions (excluding the parts protruding from the body): 44.4 mm x 442.0 mm x 425.0 mm (1.75 in. x 17.4 in. x 16.73 in.) • Maximum dimensions (the depth is the distance from ports on the front panel to the handle on the rear panel): 44.4 mm x 442.0 mm x 451.3 mm (1.75 in. x 17.4 in. x 17.77 in.)
Weight (including package)	8.7 kg (19.18 lb)
Stack ports	Any MultiGE, 10GE SFP+, or 40GE QSFP+ ports (a maximum of 16 physical ports)
RTC	Supported
RPS	Not supported
PoE	Not supported
Rated voltage range	100 V AC to 240 V AC, 50/60 Hz -48 V DC to -60 V DC
Maximum voltage range	90 V AC to 264 V AC, 47 Hz to 63 Hz -36 V DC to -72 V DC
Maximum power consumption (100% throughput, full speed of fans)	117.62 W (without card)

Item	Description
Typical power consumption (30% of traffic load, tested according to ATIS standard)	93 W (without card)
Operating temperature	0°C to 45°C (32°F to 113°F) at an altitude of 0-1800 m (0-5906 ft.) **NOTE** When the altitude is 1800-5000 m (5906-16404 ft.), the highest operating temperature reduces by 1°C (1.8°F) every time the altitude increases by 220 m (722 ft.).
Short-term operating temperature	-5°C to +50°C (23°F to 122°F) at an altitude of 0-1800 m (0-5906 ft.) **NOTE** When the altitude is 1800-5000 m (5906-16404 ft.), the highest operating temperature reduces by 1°C (1.8°F) every time the altitude increases by 220 m (722 ft.). The equipment can operate beyond the normal operating temperature range for a short-term period, but the following conditions must be met: ● The equipment operates at a temperature of over 45°C (113°F) consecutively for at most 96 hours in one year. ● The equipment operates at a temperature of over 45°C (113°F) for a total of no more than 360 hours in one year. ● The equipment operates at a temperature of over 45°C (113°F) for no more in 15 times in one year. The equipment may be damaged or experience unexpected exceptions if any of the preceding limits is exceeded. The equipment cannot start when the temperature is lower than 0°C (32°F). The maximum distance of optical modules used in these conditions cannot exceed 10 km.
Storage temperature	-40°C to +70°C (-40°F to +158°F)
Noise under normal temperature (27°C, sound power)	< 62.3 dB(A)
Relative humidity	5% to 95%, noncondensing
Operating altitude	● AC power modules configured: 0-5000 m (0-16404 ft.) ● DC power modules configured: 0-2000 m (0-6562 ft.)
Certification	● EMC certification ● Safety certification ● Manufacturing certification

Item	Description
Part number	98010716

4.7.5 S6720-32C-PWH-SI-AC

Version Mapping

Table 4-79 lists the mapping between the S6720-32C-PWH-SI-AC chassis and software versions.

Table 4-79 Version mapping

Series	Model	Software Version
S6720-SI	S6720-32C-PWH-SI-AC	V200R011C00 to V200R019C10 versions

Appearance and Structure

Figure 4-36 S6720-32C-PWH-SI-AC appearance

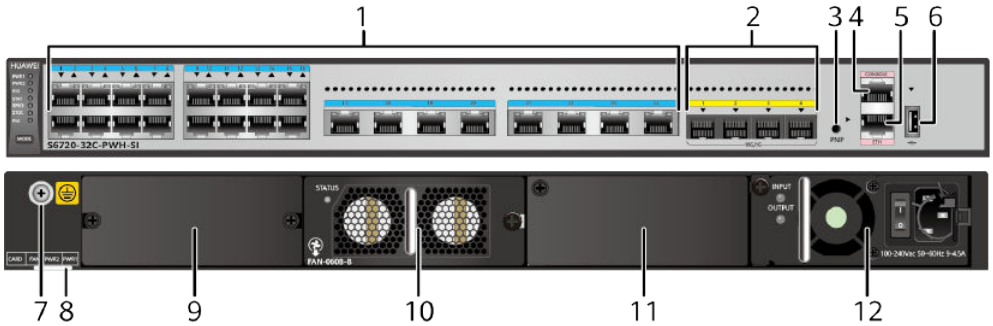

1	Twenty-four PoE++ 100M/1000M/2.5GE/5GE/10GE BASE-T ports (MultiGE port)	2	Four 10GE SFP+ ports Applicable modules and cables: • **GE optical module** • **GE-CWDM optical module** • **GE-DWDM optical module** • **GE copper module (100M/1000M auto-sensing)** • **10GE SFP+ optical module (OSXD22N00 not supported)** • **10GE-CWDM optical module** • **10GE-DWDM optical module** • **1 m, 3 m, 5 m, and 10 m SFP+ high-speed copper cables** • **3 m and 10 m SFP+ AOC cables** • **0.5 m and 1.5 m SFP+ dedicated stack copper cables (used for zero-configuration stacking, supported in V200R011C10 and later versions)** **NOTE** The four 10GE SFP+ ports on the front panel cannot be used simultaneously with ports on the rear card (except the 4-port 10GE rear card). If a rear card other than a 4-port 10GE rear card is installed in the switch, only the ports on the front panel can be used by default. • V200R011 version: To use the port on the rear card, run the **set device port-on-card enable** command. Then the four 10GE SFP+ ports on the front panel cannot be used. • V200R012 and later versions: To use the port on the rear card, run the **undo set device port-config-mode port-on-board enable** command. Then the four 10GE SFP+ ports on the front panel cannot be used.

3	One PNP button **NOTICE** Applicable in V200R012C00 and later versions: To restore the factory settings and reset the switch, hold down the button for at least 6 seconds. To reset the switch, press the button. Resetting the switch will cause service interruption. Exercise caution when you press the PNP button.	4	One console port
5	One ETH management port	6	One USB port
7	Ground screw **NOTE** It is used with a **ground cable**.	8	ESN label **NOTE** You can draw it out to view the ESN and MAC address of the switch.
9	Rear card slot **NOTE** Cards supported: • **ES5D21Q02Q00** • **ES5D21X04S01**	10	Fan slot **NOTE** Applicable fan module: **6.5 FAN-060B-B (Fan box (B, FAN panel side exhaust))**
11	Power module slot 2 **NOTE** Applicable power modules: • **580 W AC PoE power module** • **650 W DC PoE power module** • **1000 W AC PoE power module** (applicable in V200R013C00 and later versions)	12	Power module slot 1 **NOTE** Applicable power modules: • **580 W AC PoE power module** • **650 W DC PoE power module** • **1000 W AC PoE power module** (applicable in V200R013C00 and later versions)

Port Description

100M/1000M/2.5GE/5GE/10GE BASE-T port (MultiGE port)

A 100M/1000M/2.5GE/5GE/10GE BASE-T port (MultiGE port) sends and receives service data at 100 Mbit/s, 1 Gbit/s, 2.5 Gbit/s, 5 Gbit/s, or 10 Gbit/s, and must use an **Ethernet cable**. If the 2.5 Gbit/s or 5 Gbit/s speed is required, the port must use an Ethernet cable of Cat5e or higher category. If the 10 Gbit/s speed is required, the port must use an Ethernet cable of Cat6A F/UTP or higher category. **Table 4-80** describes the attributes of a 100M/1000M/2.5GE/5GE/10GE BASE-T port.

Table 4-80 Attributes of a 100M/1000M/2.5GE/5GE/10GE BASE-T port

Attribute	Description
Connector type	RJ45
Standards compliance	IEEE802.3u, IEEE802.3ab, IEEE802.3bz, IEEE802.3an, mgbase-t
Working Mode	100/1000/2500/5000/10000 Mbit/s auto-sensing

Table 4-81 lists the maximum transmission distances of different cables on MultiGE ports.

Table 4-81 Maximum transmission distances of different cables on MultiGE ports

Cable Type (6-a-1 Bundle)	MultiGE Port (Different Rates)				
	24*100M/1000M	Left 16x2.5GE	Right 8x2.5GE	24x5GE	24x10GE
Category 5e unshielded twisted pair (Cat5e UTP)	100 m	100 m	100 m	• 55 m • 100 m (6-a-1 bundle only for the first 30 m) Not recommended due to high risk	Not supported

Cable Type (6-a-1 Bundle)	MultiGE Port (Different Rates)				
	24*100M/1000M	Left 16x2.5GE	Right 8x2.5GE	24x5GE	24x10GE
Category 5e shielded twisted pair (Cat5e STP)	100 m	100 m	200 m Only the APs listed below are supported if the transmission distance is longer than 100 m: ● AP7052DN/AP7152DN ● AP6052DN ● AP8082DN/AP8182DN ● AP7052DE ● AP7060DN	100 m	Not supported
Category 6 unshielded twisted pair (Cat6 UTP)	100 m	100 m	100 m	100 m Not recommended due to high risk	Not supported

Cable Type (6-a-1 Bundle)	MultiGE Port (Different Rates)				
	24*100M/1000M	Left 16x2.5GE	Right 8x2.5GE	24x5GE	24x10GE
Category 6 shielded twisted pair (Cat6 STP)	100 m	100 m	200 m Only the APs listed below are supported if the transmission distance is longer than 100 m: ● AP7052DN/AP7152DN ● AP6052DN ● AP8082DN/AP8182DN ● AP7052DE ● AP7060DN	100 m	Not supported
Category 6A unshielded twisted pair (Cat6A U/UTP)	100 m	100 m	100 m	100 m Not recommended due to high risk	Not supported

Cable Type (6-a-1 Bundle)	MultiGE Port (Different Rates)				
	24*100M/1000M	Left 16x2.5GE	Right 8x2.5GE	24x5GE	24x10GE
Category 6A foiled/unshielded twisted pair (Cat6A F/UTP)	100 m	100 m	200 m Only the APs listed below are supported if the transmission distance is longer than 100 m: ● AP7052DN/AP7152DN ● AP6052DN ● AP8082DN/AP8182DN ● AP7052DE ● AP7060DN	100 m	100 m

Cable Type (6-a-1 Bundle)	MultiGE Port (Different Rates)				
	24*100M/1000M	Left 16x2.5GE	Right 8x2.5GE	24x5GE	24x10GE
Category 6A shielded twisted pair (Cat6A STP)	100 m	100 m	200 m Only the APs listed below are supported if the transmission distance is longer than 100 m: ● AP7052DN/AP7152DN ● AP6052DN ● AP8082DN/AP8182DN ● AP7052DE ● AP7060DN	100 m	100 m

Cable Type (6-a-1 Bundle)	MultiGE Port (Different Rates)				
	24*100M/1000M	Left 16x2.5GE	Right 8x2.5GE	24x5GE	24x10GE
Category 7 twisted pair (Cat7)	100 m	100 m	200 m Only the APs listed below are supported if the transmission distance is longer than 100 m: ● AP7052DN/AP7152DN ● AP6052DN ● AP8082DN/AP8182DN ● AP7052DE ● AP7060DN	100 m	100 m

NOTE

6-a-1 stands for the six-around-one cable bundle mode, with one cable in the center and six cables bundled evenly around it.

Some cables pose high risks and are not recommended for the following reasons:

- 802.3bz requires that the ALSNR value for alien crosstalk between Ethernet cables be greater than 0, but the standards for Cat5e and Cat6 unshielded twisted pairs do not specify the required ALSNR value. Therefore, such cables may not meet the crosstalk requirement in 802.3bz, causing severe problems such as continuous packet loss.
- According the cabling specification TIA TSB-5021, using Cat5e and Cat6 cables for 5G poses high risks.
- Currently, no clear onsite testing or evaluation method is available for checking whether ALSNR of cables conforms to 802.3bz.

If Cat5e and Cat6 unshielded twisted pairs do not meet the 5G requirement, you are advised to replace them with shielded twisted pairs or reduce the rate of ports to 2.5G.

If Cat5E, Cat6, or Cat6A unshielded twisted pairs are used on electrical ports working at 10 Gbit/s, severe problems such as continuous packet loss or port flapping may occur.

10GE SFP+ port

A 10GE SFP+ Ethernet optical port supports auto-sensing to 1000 Mbit/s. It sends and receives service data at 1000 Mbit/s or 10 Gbit/s. **Table 4-82** describes the attributes of a 10GE SFP+ Ethernet optical port.

Table 4-82 Attributes of a 10GE SFP+ port

Attribute	Description
Connector type	LC/PC
Optical port attributes	Depend on the optical module used
Standards compliance	IEEE802.3ae
Working mode	GE/10GE auto-sensing

Console port

The console port is connected to a console for on-site configuration. The port must use a **console cable**. The console port is used when a switch is powered on for the first time. For details about the attributes of a console port, see **Table 4-83**.

Table 4-83 Attributes of a console port

Attribute	Description
Connector type	RJ45
Standards compliance	RS-232
Working mode	Duplex Universal Asynchronous Receiver/Transmitter (UART)
Baud rate	9600 bit/s, 19200 bit/s, 38400 bit/s, 57600 bit/s, or 115200 bit/s Default value: 9600 bit/s

ETH management port

You can connect a switch to a configuration terminal or network management workstation through the ETH management port to configure the switch locally or remotely. The port must use an **Ethernet cable**. You can choose to download the software package through the ETH management port in the BootLoad menu. File transfer through the ETH management port is faster than transfer through the console port. **Table 4-84** describes the attributes of an ETH management port.

Table 4-84 Attributes of an ETH management port

Attribute	Description
Connector type	RJ45
Standards compliance	IEEE802.3
Working mode	10/100 Mbit/s auto-sensing
Maximum transmission distance	100 m

In V200R012C00 and later versions, you can log in to the switch that contains the ETH management port for the first time through the ETH port. For details, see "First Login to a Switch" in the *Configuration Guide - Basic Configuration*. If you have logged in to the device for the first time by pressing and holding the MODE button for 6 seconds or longer and saved the configuration, the default configuration on the ETH port will be cleared. In this case, you cannot log in to the switch for the first time through the ETH port. You are advised to log in to the switch for the first time through the ETH port.

USB port

The USB port can have a USB flash drive connected to upgrade the switch, or transfer configuration files or other files. The USB port can only connect to a USB flash drive that complies with USB 2.0.

NOTE

USB flash drives from different vendors differ in model compatibility and drivers. If a USB flash drive cannot be used, try to replace it with another one from a mainstream vendor. Switches support a maximum of 128 GB USB flash drives.

Indicator Description

NOTE

Hold down the mode switch button for 6s and release it to start the web initial login mode. Either of the following situations will occur:

- If the switch has no configuration file, the system attempts to enter the web initial login mode. In this mode, the status of mode indicators is as follows:
  - If the system enters the web initial login mode successfully, all mode indicators turn green and stay on for a maximum of 10 minutes.
  - If the system fails to enter the initial login mode, all mode indicators fast blink for 10 seconds and then restore the default status.
- If the switch has a configuration file, the system cannot enter the web initial login mode. In this case, all mode indicators fast blink for 10s, and then return to the default states.

Figure 4-37 Indicators on the S6720-32C-PWH-SI-AC

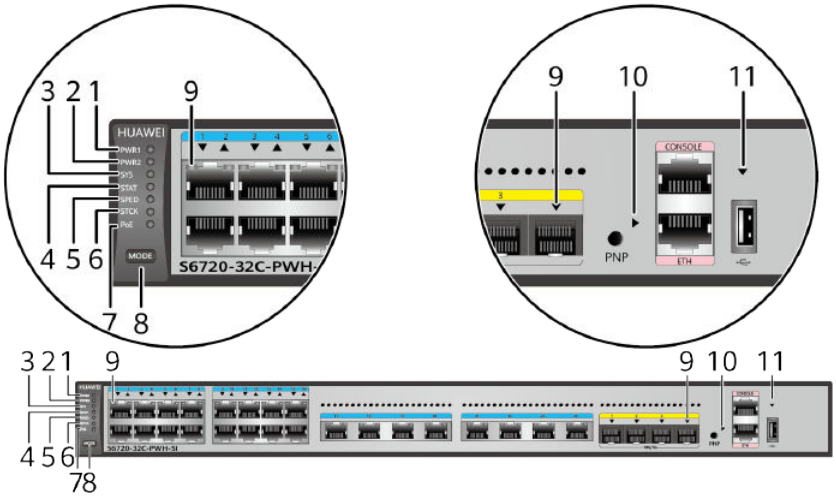

NOTE

The S6720-SI series switches provide a command for setting fault indicators, which help field maintenance personnel find a faulty switch quickly.

The SYS indicator and mode indicators (STAT, SPED, and STCK) are used as fault indicators of a switch. If the switch fails, its SYS indicator and mode indicators can be configured to blink red fast so that field maintenance personnel can find this faulty switch.

Table 4-85 Description of indicators on the switch

No.	Indicator	Name	Color	Status	Description
1	PWR 1	Power module indicator	-	Off	No power module is available in power module slot 1, or the switch has only one power module but the power module does not work normally.
			Green	Steady on	A power module is installed in power module slot 1 and is working normally.
			Yellow	Steady on	The switch has two power modules installed. Any of the following situations occurs in power module slot 1: ● A power module is available in this slot but its power switch is in the OFF position. ● A power module is available in this slot but it is not connected to a power source. ● The power module in this slot has failed.

No.	Indicator	Name	Color	Status	Description
2	PWR 2	Power module indicator	-	Off	No power module is available in power module slot 2, or the switch has only one power module but the power module does not work normally.
			Green	Steady on	A power module is installed in power module slot 2 and is working normally.
			Yellow	Steady on	The switch has two power modules installed. Any of the following situations occurs in power module slot 2: ● A power module is available in this slot but its power switch is in the OFF position. ● A power module is available in this slot but it is not connected to a power source. ● The power module in this slot has failed.
3	SYS	System status indicator	-	Off	The system is not running.
			Green	Fast blinking	The system is starting.
			Green	Slow blinking	The system is running normally.
			Red	Steady on	The system does not work normally after registration, or a fan alarm or temperature alarm has been generated.
4	STAT	Status indicator	-	Off	The status mode is not selected.
			Green	Steady on	The status mode (default mode) is selected. If the status mode is selected, the service port indicator shows the port link or activity state.
5	SPED	Speed indicator	-	Off	The speed mode is not selected.
			Green	Steady on	The service port indicators show the port speeds. After 45 seconds, the service port indicators automatically restore to the status mode.

No.	Indicator	Name	Color	Status	Description
6	STCK	Stack indicator	-	Off	• If you are not changing the indicator mode (default): The switch is in stack standby or slave state or the stacking function is not enabled on the switch. • If you are changing the indicator mode: The stack mode is not selected.
			Green	Steady on	The switch is a standby or slave switch in a stack, and the service port indicators show the stack ID of the switch.
			Green	Blinking	• If you are not changing the indicator mode (default): The switch is a stack master switch or a standalone switch with the stacking function enabled. • If you are changing the indicator mode: The switch is the master switch in a stack or a standalone switch, and the service port indicators show the stack ID of the master switch. After 45 seconds, the service port indicators automatically restore to the status mode.
7	PoE	PoE indicator	-	Off	The PoE mode is not selected.
			Green	Steady on	The service port indicators show the PoE status. After 45 seconds, the service port indicators automatically restore to the status mode.

No.	Indicator	Name	Color	Status	Description
8	MODE	Mode switch button	-	-	• When you press this button once, the service port indicators change to the speed mode and show the speed of each service port. • When you press this button a second time, the service port indicators change to the stack mode and show the stack ID of the local switch. • When you press this button a third time, the service port indicators change to the PoE mode and show the PoE status of each service port. • When you press this button a fourth time, the service port indicators restore to the default mode, and the STAT indicator turns green. If you do not press the MODE button within 45 seconds, the service port indicators restore to the default mode. In this case, the STAT indicator is steady green, the SPED and PoE indicators are off, and the STCK indicator is off or blinking green.
9	-	Service port indicator	Meanings of service port indicators vary in different modes. For details, see **Table 4-86** and **Table 4-87**.		
10	-	ETH port indicator	-	Off	The ETH port is not connected.
			Green	Steady on	The ETH port is connected.
			Green	Blinking	The ETH port is sending or receiving data.
11	-	USB-based deployment indicator	-	Off	• No USB flash drive is connected to the switch. • The USB port is damaged. • The indicator is damaged. • The USB flash drive does not have any configuration file and cannot be used for deployment. • The switch has been upgraded using the USB flash drive and is restarting.

No.	Indicator	Name	Color	Status	Description
			Green	Steady on	A USB-based deployment has been completed.
			Green	Blinking	The system is reading data from the USB flash drive.
			Yellow	Steady on	The switch has copied all the required files and completed the file check. The USB flash drive can be removed from the switch.
			Red	Blinking	An error has occurred when the system is executing the configuration file or reading data from the USB flash drive.

Table 4-86 Description of service port indicators in different modes (one indicator for each port)

Display Mode	Color	Status	Description
Status	-	Off	The port is not connected or has been shut down.
	Green	Steady on	A link has been established on the port.
	Green	Blinking	The port is sending or receiving data.
Speed	-	Off	The port is not connected or has been shut down.
	Green	Steady on	The port is working at 100/1000 Mbit/s.
	Green	Blinking	The port is working at 2.5/5/10 Gbit/s.
PoE	-	Off	The port is not providing power to a powered device (PD).
	Green	Steady on	The port is providing power to a PD.
	Yellow	Steady on	The PoE function is disabled on the port.
	Yellow	Blinking	The port stops providing PoE power because of an exception (for example, an incompatible PD is connected to the port).

Display Mode	Color	Status	Description
	Green and yellow	Blinking green and yellow alternately	The port fails to supply power to a PD due to one of the following reasons: ● The power required by the connected PD exceeds the maximum power or the configured power threshold of the port. ● The total power consumption of PDs has reached the maximum power of the switch. ● The manual power management mode is used and the port is not enabled to provide power to the PD.
Stack	-	Off	Port indicators do not show the stack ID of the switch.
	Green	Steady on	The switch is not the master switch in a stack. ● If the indicator of a port is steady on, the number of this port is the stack ID of the switch. ● If the indicators of ports 1 to 9 are steady on, the stack ID of the switch is 0.
	Green	Blinking	The switch is the master switch in a stack. ● If the indicator of a port is blinking, the number of this port is the stack ID of the switch. ● If the indicators of ports 1 to 9 are blinking, the stack ID of the switch is 0.

Table 4-87 Description of service port indicators in different modes (two indicators for each port)

Display Mode	Color	Status	Description
Status	-	Off	The port is not connected or has been shut down.
	Green	Steady on	A link has been established on the port.
	Yellow	Blinking	The port is sending or receiving data.
Speed	-	Off	The port is not connected or has been shut down.

Display Mode	Color	Status	Description
	Green and yellow	Steady on	The port is working at 100/1000 Mbit/s.
	Green and yellow	Blinking	The port is working at 2.5/5/10 Gbit/s.
PoE	-	Off	The port is not providing power to a powered device (PD).
	Green	Steady on	The port is providing power to a PD.
	Yellow	Steady on	The PoE function is disabled on the port.
	Yellow	Blinking	The port stops providing PoE power because of an exception (for example, an incompatible PD is connected to the port).
	Green and yellow	Blinking green and yellow alternately	The port fails to supply power to a PD due to one of the following reasons: ● The power required by the connected PD exceeds the maximum power or the configured power threshold of the port. ● The total power consumption of PDs has reached the maximum power of the switch. ● The manual power management mode is used and the port is not enabled to provide power to the PD.
Stack	-	Off	Port indicators do not show the stack ID of the switch.
	Green and yellow	Steady on	The switch is not the master switch in a stack. ● If the indicator of a port is steady on, the number of this port is the stack ID of the switch. ● If the indicators of ports 1 to 9 are steady on, the stack ID of the switch is 0.
	Green and yellow	Blinking	The switch is the master switch in a stack. ● If the indicator of a port is blinking, the number of this port is the stack ID of the switch. ● If the indicators of ports 1 to 9 are blinking, the stack ID of the switch is 0.

Power Supply Configuration

The S6720-32C-PWH-SI-AC is a PoE switch. It provides two power module slots, each supporting a 580 W, 650 W, or 1000 W (applicable in V200R013C00 and later versions) power module. A 580 W AC power module and a 650 W DC power module can be used together. A 580 W AC power module and a 1000 W AC power module can be used together. **Table 4-88** lists its power supply configurations.

Table 4-88 Power supply configurations

Power Module 1	Power Module 2	Available PoE Power	Maximum Number of Ports (Fully Loaded)
580 W or 650 W	–	369.6 W	• 802.3af (15.4 W per port): 24 • 802.3at (30 W per port): 12 • 802.3bt (60 W per port): 6
580 W or 650 W	580 W or 650 W	739.2 W	• 802.3af (15.4 W per port): 24 • 802.3at (30 W per port): 24 • 802.3bt (60 W per port): 12
1000 W (220 V)	-	754.6 W	• 802.3af (15.4 W per port): 24 • 802.3at (30 W per port): 24 • 802.3bt (60 W per port): 12
1000 W (220 V)	1000 W (220 V)	1440 W	• 802.3af (15.4 W per port): 24 • 802.3at (30 W per port): 24 • 802.3bt (60 W per port): 24
1000 W (110 V)	-	754.6 W	• 802.3af (15.4 W per port): 24 • 802.3at (30 W per port): 24 • 802.3bt (60 W per port): 12

Power Module 1	Power Module 2	Available PoE Power	Maximum Number of Ports (Fully Loaded)
1000 W (110 V)	1000 W (110 V)	1440 W	• 802.3af (15.4 W per port): 24 • 802.3at (30 W per port): 24 • 802.3bt (60 W per port): 24
1000 W	580 W	739.2 W	• 802.3af (15.4 W per port): 24 • 802.3at (30 W per port): 24 • 802.3bt (60 W per port): 12
580 W	1000 W	739.2 W	• 802.3af (15.4 W per port): 24 • 802.3at (30 W per port): 24 • 802.3bt (60 W per port): 12

NOTE

When a switch has two power modules installed, the two power modules work in redundancy mode to provide power for the chassis and in load balancing mode to provide power for PDs.

Figure 4-38 shows the power supply mode of dual AC PoE power modules (PWR1 and PWR2). After AC power is transmitted to the PWR modules, the PWR modules provide 12 V and -53 V outputs. The outputs are combined on the motherboard, which then provides 12 V voltage for the switch and -53 V voltage for the PDs.

Figure 4-38 Power supply by dual AC PoE power modules

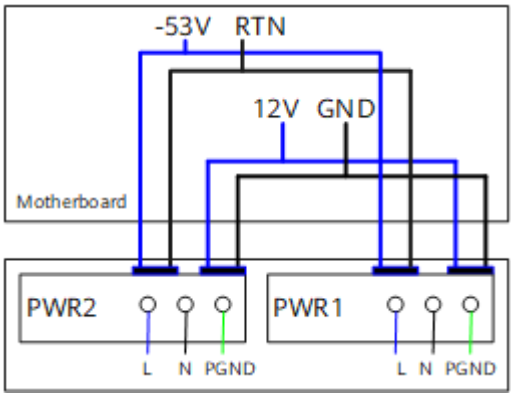

L: live wire N: neutral wire PGND: protection ground wire GND: 12 V reference ground RTN: -53 V reference ground

Figure 4-39 shows the power supply connections of dual DC PoE power modules. After DC power is transmitted to the PWR module, the PWR module provides 12 V and -53 V output voltages, and the motherboard provides 12 V voltage for the entire device and -53 V voltage for the PDs.

Figure 4-39 Power supply connections of dual DC PoE power modules

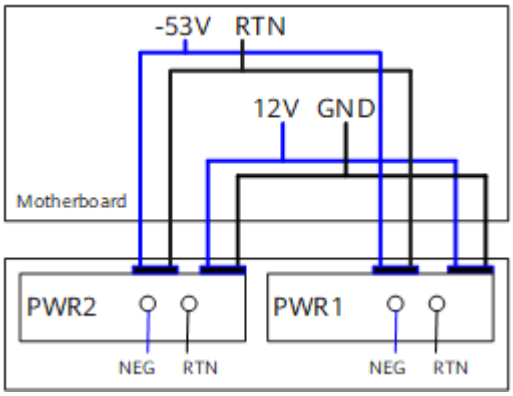

NEG: negative wire RTN: positive wire GND: 12 V reference ground RTN: -53 V reference ground

Heat Dissipation

The S6720-32C-PWH-SI-AC uses a pluggable fan module for forced air cooling. Air flows in from the left, right, and front sides, and exhausts from the rear panel.

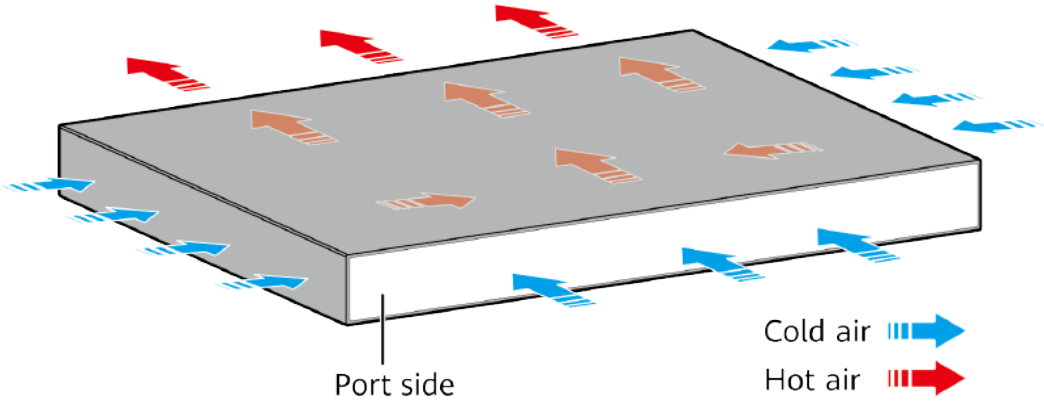

NOTE

This figure only shows the airflow direction and does not depict the actual device.

Technical Specifications

Table 4-89 lists technical specifications of the S6720-32C-PWH-SI-AC.

Table 4-89 Technical specifications

Item	Description
Memory (RAM)	1 GB
Flash	512 MB in total. To view the available flash memory size, run the **display version** command.
Mean time between failures (MTBF)	22.7 years
Mean time to repair (MTTR)	2 hours
Availability	> 0.99999
Service port surge protection	Common mode: ±7 kV
Power supply surge protection	• Using 580 W AC or 1000 W AC power modules: ±6 kV in differential mode, ±6 kV in common mode • Using 650 W DC power modules: ±2 kV in differential mode, ±4 kV in common mode
Dimensions (H x W x D)	• Basic dimensions (excluding the parts protruding from the body): 44.4 mm x 442.0 mm x 425.0 mm (1.75 in. x 17.4 in. x 16.73 in.) • Maximum dimensions (the depth is the distance from ports on the front panel to the handle on the rear panel): 44.4 mm x 442.0 mm x 451.3 mm (1.75 in. x 17.4 in. x 17.77 in.)

Item	Description
Weight (including package)	9.1 kg (20.06 lb)
Stack ports	Any MultiGE, 10GE SFP+, or 40GE QSFP+ ports (a maximum of 16 physical ports)
RTC	Supported
RPS	Not supported
PoE	Supported
Rated voltage range	100 V AC to 240 V AC, 50/60 Hz -48 V DC to -60 V DC
Maximum voltage range	90 V AC to 264 V AC, 47 Hz to 63 Hz -38.4 V DC to -72 V DC
Maximum power consumption (100% throughput, full speed of fans)	● Using 650 W DC or 580 W AC power modules: – Not providing the PoE function: 125.6 W (without card) – 100% PoE loads: 1017.2 W (system power consumption: 278 W, PoE: 739.2 W, without card) ● Using 1000 W AC power modules: – Not providing the PoE function: 125.6 W (without card) – 100% PoE loads: 1735 W (system power consumption: 295 W, PoE: 1440 W)
Typical power consumption (30% of traffic load, tested according to ATIS standard)	● Using 650 W DC or 580 W AC power modules: 106.9 W (without card and PoE) ● Using 1000 W AC power modules: 121.6 W (without card and PoE)
Operating temperature	0°C to 45°C (32°F to 113°F) at an altitude of 0-1800 m (0-5906 ft.) **NOTE** When the altitude is 1800-5000 m (5906-16404 ft.), the highest operating temperature reduces by 1°C (1.8°F) every time the altitude increases by 220 m (722 ft.).

Item	Description
Short-term operating temperature	-5°C to +50°C (23°F to 122°F) at an altitude of 0-1800 m (0-5906 ft.) **NOTE** When the altitude is 1800-5000 m (5906-16404 ft.), the highest operating temperature reduces by 1°C (1.8°F) every time the altitude increases by 220 m (722 ft.). The equipment can operate beyond the normal operating temperature range for a short-term period, but the following conditions must be met: ● The equipment operates at a temperature of over 45°C (113°F) consecutively for at most 96 hours in one year. ● The equipment operates at a temperature of over 45°C (113°F) for a total of no more than 360 hours in one year. ● The equipment operates at a temperature of over 45°C (113°F) for no more in 15 times in one year. The equipment may be damaged or experience unexpected exceptions if any of the preceding limits is exceeded. The equipment cannot start when the temperature is lower than 0°C (32°F). The maximum distance of optical modules used in these conditions cannot exceed 10 km.
Storage temperature	-40°C to +70°C (-40°F to +158°F)
Noise under normal temperature (27°C, sound power)	< 62.3 dB(A)
Relative humidity	5% to 95%, noncondensing
Operating altitude	0-5000 m (0-16404 ft.)
Certification	● EMC certification ● Safety certification ● Manufacturing certification
Part number	98010719

4.7.6 S6720-32C-PWH-SI

Version Mapping

Table 4-90 lists the mapping between the S6720-32C-PWH-SI chassis and software versions.

Table 4-90 Version mapping

Series	Model	Software Version
S6720-SI	S6720-32C-PWH-SI	V200R011C00 to V200R019C10 versions

Appearance and Structure

Figure 4-40 S6720-32C-PWH-SI appearance

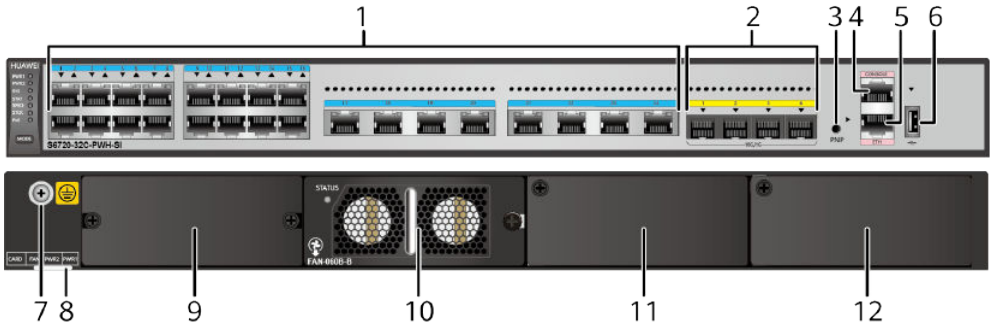

1	Twenty-four PoE++ 100M/1000M/2.5GE/5GE/10GE BASE-T ports (MultiGE port)	2	Four 10GE SFP+ ports Applicable modules and cables: • **GE optical module** • **GE-CWDM optical module** • **GE-DWDM optical module** • **GE copper module (100M/1000M auto-sensing)** • **10GE SFP+ optical module (OSXD22N00 not supported)** • **10GE-CWDM optical module** • **10GE-DWDM optical module** • **1 m, 3 m, 5 m, and 10 m SFP+ high-speed copper cables** • **3 m and 10 m SFP+ AOC cables** • **0.5 m and 1.5 m SFP+ dedicated stack copper cables (used for zero-configuration stacking, supported in V200R011C10 and later versions)** **NOTE** The four 10GE SFP+ ports on the front panel cannot be used simultaneously with ports on the rear card (except the 4-port 10GE rear card). If a rear card other than a 4-port 10GE rear card is installed in the switch, only the ports on the front panel can be used by default. • V200R011 version: To use the port on the rear card, run the **set device port-on-card enable** command. Then the four 10GE SFP+ ports on the front panel cannot be used. • V200R012 and later versions: To use the port on the rear card, run the **undo set device port-config-mode port-on-board enable** command. Then the four 10GE SFP+ ports on the front panel cannot be used.

3	One PNP button **NOTICE** Applicable in V200R012C00 and later versions: To restore the factory settings and reset the switch, hold down the button for at least 6 seconds. To reset the switch, press the button. Resetting the switch will cause service interruption. Exercise caution when you press the PNP button.	4	One console port
5	One ETH management port	6	One USB port
7	Ground screw **NOTE** It is used with a **ground cable**.	8	ESN label **NOTE** You can draw it out to view the ESN and MAC address of the switch.
9	Rear card slot **NOTE** Cards supported: • **ES5D21Q02Q00** • **ES5D21X04S01**	10	Fan slot **NOTE** Applicable fan module: **6.5 FAN-060B-B (Fan box (B, FAN panel side exhaust))**
11	Power module slot 2 **NOTE** Applicable power modules: • **580 W AC PoE power module** • **650 W DC PoE power module** • **1150 W AC PoE power module** • **1000 W AC PoE power module** (applicable in V200R013C00 and later versions)	12	Power module slot 1 **NOTE** Applicable power modules: • **580 W AC PoE power module** • **650 W DC PoE power module** • **1150 W AC PoE power module** • **1000 W AC PoE power module** (applicable in V200R013C00 and later versions)

Port Description

100M/1000M/2.5GE/5GE/10GE BASE-T port (MultiGE port)

A 100M/1000M/2.5GE/5GE/10GE BASE-T port (MultiGE port) sends and receives service data at 100 Mbit/s, 1 Gbit/s, 2.5 Gbit/s, 5 Gbit/s, or 10 Gbit/s, and must use an **Ethernet cable**. If the 2.5 Gbit/s or 5 Gbit/s speed is required, the port must use an Ethernet cable of Cat5e or higher category. If the 10 Gbit/s speed is required, the port must use an Ethernet cable of Cat6A F/UTP or higher category. **Table 4-91** describes the attributes of a 100M/1000M/2.5GE/5GE/10GE BASE-T port.

Table 4-91 Attributes of a 100M/1000M/2.5GE/5GE/10GE BASE-T port

Attribute	Description
Connector type	RJ45
Standards compliance	IEEE802.3u, IEEE802.3ab, IEEE802.3bz, IEEE802.3an, mgbase-t
Working Mode	100/1000/2500/5000/10000 Mbit/s auto-sensing

Table 4-92 lists the maximum transmission distances of different cables on MultiGE ports.

Table 4-92 Maximum transmission distances of different cables on MultiGE ports

Cable Type (6-a-1 Bundle)	MultiGE Port (Different Rates)				
	24*100M/1000M	Left 16x2.5GE	Right 8x2.5GE	24x5GE	24x10GE
Category 5e unshielded twisted pair (Cat5e UTP)	100 m	100 m	100 m	• 55 m • 100 m (6-a-1 bundle only for the first 30 m) Not recommended due to high risk	Not supported

Cable Type (6-a-1 Bundle)	MultiGE Port (Different Rates)				
	24*100M/1000M	Left 16x2.5GE	Right 8x2.5GE	24x5GE	24x10GE
Category 5e shielded twisted pair (Cat5e STP)	100 m	100 m	200 m Only the APs listed below are supported if the transmission distance is longer than 100 m: ● AP7052DN/AP7152DN ● AP6052DN ● AP8082DN/AP8182DN ● AP7052DE ● AP7060DN	100 m	Not supported
Category 6 unshielded twisted pair (Cat6 UTP)	100 m	100 m	100 m	100 m Not recommended due to high risk	Not supported

Cable Type (6-a-1 Bundle)	MultiGE Port (Different Rates)				
	24*100M/1000M	Left 16x2.5GE	Right 8x2.5GE	24x5GE	24x10GE
Category 6 shielded twisted pair (Cat6 STP)	100 m	100 m	200 m Only the APs listed below are supported if the transmission distance is longer than 100 m: ● AP7052DN/AP7152DN ● AP6052DN ● AP8082DN/AP8182DN ● AP7052DE ● AP7060DN	100 m	Not supported
Category 6A unshielded twisted pair (Cat6A U/UTP)	100 m	100 m	100 m	100 m Not recommended due to high risk	Not supported

Cable Type (6-a-1 Bundle)	MultiGE Port (Different Rates)				
	24*100M/1000M	Left 16x2.5GE	Right 8x2.5GE	24x5GE	24x10GE
Category 6A foiled/unshielded twisted pair (Cat6A F/UTP)	100 m	100 m	200 m Only the APs listed below are supported if the transmission distance is longer than 100 m: ● AP7052DN/AP7152DN ● AP6052DN ● AP8082DN/AP8182DN ● AP7052DE ● AP7060DN	100 m	100 m

Cable Type (6-a-1 Bundle)	MultiGE Port (Different Rates)				
	24*100M/1000M	Left 16x2.5GE	Right 8x2.5GE	24x5GE	24x10GE
Category 6A shielded twisted pair (Cat6A STP)	100 m	100 m	200 m Only the APs listed below are supported if the transmission distance is longer than 100 m: ● AP7052DN/AP7152DN ● AP6052DN ● AP8082DN/AP8182DN ● AP7052DE ● AP7060DN	100 m	100 m

Cable Type (6-a-1 Bundle)	MultiGE Port (Different Rates)				
	24*100M/1000M	Left 16x2.5GE	Right 8x2.5GE	24x5GE	24x10GE
Category 7 twisted pair (Cat7)	100 m	100 m	200 m Only the APs listed below are supported if the transmission distance is longer than 100 m: ● AP7052DN/AP7152DN ● AP6052DN ● AP8082DN/AP8182DN ● AP7052DE ● AP7060DN	100 m	100 m

NOTE

6-a-1 stands for the six-around-one cable bundle mode, with one cable in the center and six cables bundled evenly around it.

Some cables pose high risks and are not recommended for the following reasons:

- 802.3bz requires that the ALSNR value for alien crosstalk between Ethernet cables be greater than 0, but the standards for Cat5e and Cat6 unshielded twisted pairs do not specify the required ALSNR value. Therefore, such cables may not meet the crosstalk requirement in 802.3bz, causing severe problems such as continuous packet loss.
- According the cabling specification TIA TSB-5021, using Cat5e and Cat6 cables for 5G poses high risks.
- Currently, no clear onsite testing or evaluation method is available for checking whether ALSNR of cables conforms to 802.3bz.

If Cat5e and Cat6 unshielded twisted pairs do not meet the 5G requirement, you are advised to replace them with shielded twisted pairs or reduce the rate of ports to 2.5G.

If Cat5E, Cat6, or Cat6A unshielded twisted pairs are used on electrical ports working at 10 Gbit/s, severe problems such as continuous packet loss or port flapping may occur.

10GE SFP+ port

A 10GE SFP+ Ethernet optical port supports auto-sensing to 1000 Mbit/s. It sends and receives service data at 1000 Mbit/s or 10 Gbit/s. **Table 4-93** describes the attributes of a 10GE SFP+ Ethernet optical port.

Table 4-93 Attributes of a 10GE SFP+ port

Attribute	Description
Connector type	LC/PC
Optical port attributes	Depend on the optical module used
Standards compliance	IEEE802.3ae
Working mode	GE/10GE auto-sensing

Console port

The console port is connected to a console for on-site configuration. The port must use a **console cable**. The console port is used when a switch is powered on for the first time. For details about the attributes of a console port, see **Table 4-94**.

Table 4-94 Attributes of a console port

Attribute	Description
Connector type	RJ45
Standards compliance	RS-232
Working mode	Duplex Universal Asynchronous Receiver/Transmitter (UART)
Baud rate	9600 bit/s, 19200 bit/s, 38400 bit/s, 57600 bit/s, or 115200 bit/s Default value: 9600 bit/s

ETH management port

You can connect a switch to a configuration terminal or network management workstation through the ETH management port to configure the switch locally or remotely. The port must use an **Ethernet cable**. You can choose to download the software package through the ETH management port in the BootLoad menu. File transfer through the ETH management port is faster than transfer through the console port. **Table 4-95** describes the attributes of an ETH management port.

Table 4-95 Attributes of an ETH management port

Attribute	Description
Connector type	RJ45
Standards compliance	IEEE802.3
Working mode	10/100 Mbit/s auto-sensing
Maximum transmission distance	100 m

In V200R012C00 and later versions, you can log in to the switch that contains the ETH management port for the first time through the ETH port. For details, see "First Login to a Switch" in the *Configuration Guide - Basic Configuration*. If you have logged in to the device for the first time by pressing and holding the MODE button for 6 seconds or longer and saved the configuration, the default configuration on the ETH port will be cleared. In this case, you cannot log in to the switch for the first time through the ETH port. You are advised to log in to the switch for the first time through the ETH port.

USB port

The USB port can have a USB flash drive connected to upgrade the switch, or transfer configuration files or other files. The USB port can only connect to a USB flash drive that complies with USB 2.0.

NOTE

USB flash drives from different vendors differ in model compatibility and drivers. If a USB flash drive cannot be used, try to replace it with another one from a mainstream vendor. Switches support a maximum of 128 GB USB flash drives.

Indicator Description

The S6720-32C-PWH-SI has the same types of indicators as the S6720-32C-PWH-SI-AC. For details, see **Indicator Description**.

Power Supply Configuration

The S6720-32C-PWH-SI is a PoE switch. It provides two power module slots, each supporting a 580 W, 650 W, 1150 W, or 1000 W (applicable in V200R013C00 and later versions) power module.

- A 580 W AC power module and a 650 W DC power module can be used together.
- A 1000 W AC power module and a 580 W AC power module can be used together.
- A 1000 W AC power module and a 1150 W AC power module can be used together.

Table 4-96 lists its power supply configurations.

Table 4-96 Power supply configurations

Power Module 1	Power Module 2	Available PoE Power	Maximum Number of Ports (Fully Loaded)
580 W or 650 W	–	369.6 W	• 802.3af (15.4 W per port): 24 • 802.3at (30 W per port): 12 • 802.3bt (60 W per port): 6
580 W or 650 W	580 W or 650 W	739.2 W	• 802.3af (15.4 W per port): 24 • 802.3at (30 W per port): 24 • 802.3bt (60 W per port): 12
1150 W (220 V)	–	785.4 W	• 802.3af (15.4 W per port): 24 • 802.3at (30 W per port): 24 • 802.3bt (60 W per port): 13
1150 W (220 V)	1150 W (220 V)	1440 W	• 802.3af (15.4 W per port): 24 • 802.3at (30 W per port): 24 • 802.3bt (60 W per port): 24
1150 W (110 V)	–	446.6 W	• 802.3af (15.4 W per port): 24 • 802.3at (30 W per port): 14 • 802.3bt (60 W per port): 7
1150 W (110 V)	1150 W (110 V)	893.2 W	• 802.3af (15.4 W per port): 24 • 802.3at (30 W per port): 24 • 802.3bt (60 W per port): 14

Power Module 1	Power Module 2	Available PoE Power	Maximum Number of Ports (Fully Loaded)
1000 W (220 V)	-	754.6 W	• 802.3af (15.4 W per port): 24 • 802.3at (30 W per port): 24 • 802.3bt (60 W per port): 12
1000 W (220 V)	1000 W (220 V)	1440 W	• 802.3af (15.4 W per port): 24 • 802.3at (30 W per port): 24 • 802.3bt (60 W per port): 24
1000 W (110 V)	-	754.6 W	• 802.3af (15.4 W per port): 24 • 802.3at (30 W per port): 24 • 802.3bt (60 W per port): 12
1000 W (110 V)	1000 W (110 V)	1440 W	• 802.3af (15.4 W per port): 24 • 802.3at (30 W per port): 24 • 802.3bt (60 W per port): 24
1000 W	580 W	739.2 W	• 802.3af (15.4 W per port): 24 • 802.3at (30 W per port): 24 • 802.3bt (60 W per port): 12
580 W	1000 W	739.2 W	• 802.3af (15.4 W per port): 24 • 802.3at (30 W per port): 24 • 802.3bt (60 W per port): 12

Power Module 1	Power Module 2	Available PoE Power	Maximum Number of Ports (Fully Loaded)
1000 W (220 V)	1150 W (220 V)	1440 W	• 802.3af (15.4 W per port): 24 • 802.3at (30 W per port): 24 • 802.3bt (60 W per port): 24
1150 W (220 V)	1000 W (220 V)	1440 W	• 802.3af (15.4 W per port): 24 • 802.3at (30 W per port): 24 • 802.3bt (60 W per port): 24
1000 W (110 V)	1150 W (110 V)	893.2 W	• 802.3af (15.4 W per port): 24 • 802.3at (30 W per port): 24 • 802.3bt (60 W per port): 14
1150 W (110 V)	1000 W (110 V)	893.2 W	• 802.3af (15.4 W per port): 24 • 802.3at (30 W per port): 24 • 802.3bt (60 W per port): 14

NOTE

When a switch has two power modules installed, the two power modules work in redundancy mode to provide power for the chassis and in load balancing mode to provide power for PDs.

Figure 4-41 shows the power supply mode of dual AC PoE power modules (PWR1 and PWR2). After AC power is transmitted to the PWR modules, the PWR modules provide 12 V and -53 V outputs. The outputs are combined on the motherboard, which then provides 12 V voltage for the switch and -53 V voltage for the PDs.

Figure 4-41 Power supply by dual AC PoE power modules

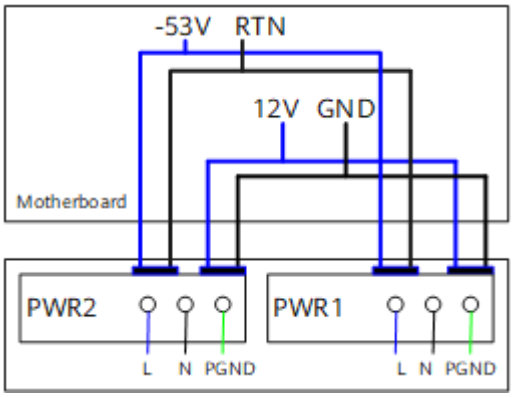

L: live wire N: neutral wire PGND: protection ground wire GND: 12 V reference ground RTN: -53 V reference ground

Figure 4-42 shows the power supply connections of dual DC PoE power modules. After DC power is transmitted to the PWR module, the PWR module provides 12 V and -53 V output voltages, and the motherboard provides 12 V voltage for the entire device and -53 V voltage for the PDs.

Figure 4-42 Power supply connections of dual DC PoE power modules

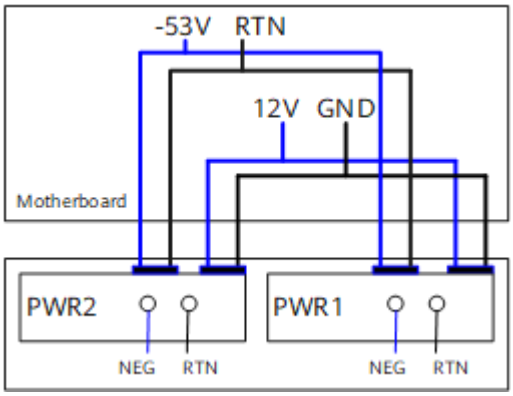

NEG: negative wire RTN: positive wire GND: 12 V reference ground RTN: -53 V reference ground

Heat Dissipation

The S6720-32C-PWH-SI uses a pluggable fan module for forced air cooling. Air flows in from the left, right, and front sides, and exhausts from the rear panel.

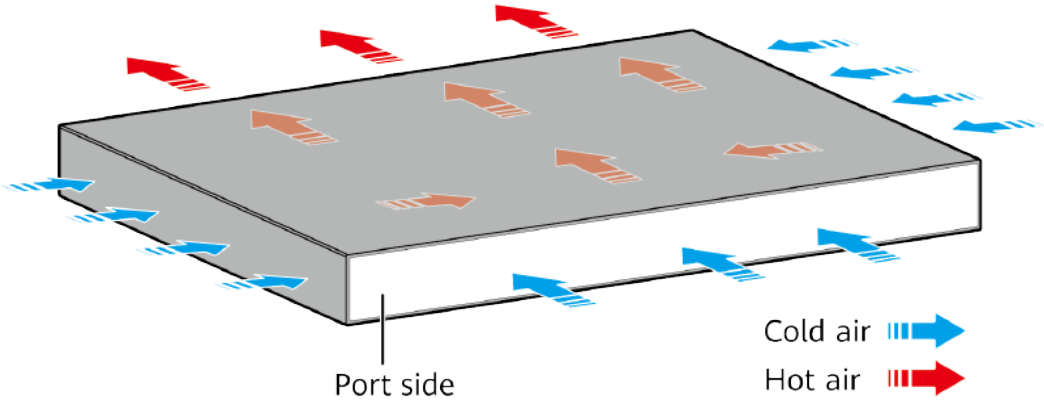

NOTE

This figure only shows the airflow direction and does not depict the actual device.

Technical Specifications

Table 4-97 lists technical specifications of the S6720-32C-PWH-SI.

Table 4-97 Technical specifications

Item	Description
Memory (RAM)	1 GB
Flash	512 MB in total. To view the available flash memory size, run the **display version** command.
Mean time between failures (MTBF)	22.7 years
Mean time to repair (MTTR)	2 hours
Availability	> 0.99999
Service port surge protection	Common mode: ±7 kV
Power supply surge protection	• Using 580 W AC or 1000 W AC power modules: ±6 kV in differential mode, ±6 kV in common mode • Using 650 W DC or 1150 W AC power modules: ±2 kV in differential mode, ±4 kV in common mode

Item	Description
Dimensions (H x W x D)	• Basic dimensions (excluding the parts protruding from the body): 44.4 mm x 442.0 mm x 425.0 mm (1.75 in. x 17.4 in. x 16.73 in.) • Maximum dimensions (the depth is the distance from ports on the front panel to the handle on the rear panel): 44.4 mm x 442.0 mm x 451.3 mm (1.75 in. x 17.4 in. x 17.77 in.) When 1150 W power modules are installed, they stretch out from the chassis. Therefore, the total depth of the switch changes to 541.1 mm (21.3 in.).
Weight (including package)	8.1 kg (17.86 lb)
Stack ports	Any MultiGE, 10GE SFP+, or 40GE QSFP+ ports (a maximum of 16 physical ports)
RTC	Supported
RPS	Not supported
PoE	Supported
Rated voltage range	100 V AC to 240 V AC, 50/60 Hz -48 V DC to -60 V DC
Maximum voltage range	90 V AC to 264 V AC, 47 Hz to 63 Hz -38.4 V DC to -72 V DC
Maximum power consumption (100% throughput, full speed of fans)	• Using 650 W DC or 580 W AC power modules: – Not providing the PoE function: 125.6 W (without card) – 100% PoE loads: 1017.2 W (system power consumption: 278 W, PoE: 739.2 W, without card) • Using 1150 W AC or 1000 W AC power modules: – Not providing the PoE function: 125.6 W (without card) – 100% PoE loads: 1735 W (system power consumption: 295 W, PoE: 1440 W)
Typical power consumption (30% of traffic load, tested according to ATIS standard)	• Using 650 W DC or 580 W AC power modules: 106.9 W (without card and PoE) • Using 1150 W AC or 1000 W AC power modules: 121.6 W (without card and PoE)

Item	Description
Operating temperature	0°C to 45°C (32°F to 113°F) at an altitude of 0-1800 m (0-5906 ft.) **NOTE** When the altitude is 1800-5000 m (5906-16404 ft.), the highest operating temperature reduces by 1°C (1.8°F) every time the altitude increases by 220 m (722 ft.).
Short-term operating temperature	-5°C to +50°C (23°F to 122°F) at an altitude of 0-1800 m (0-5906 ft.) **NOTE** When the altitude is 1800-5000 m (5906-16404 ft.), the highest operating temperature reduces by 1°C (1.8°F) every time the altitude increases by 220 m (722 ft.). The equipment can operate beyond the normal operating temperature range for a short-term period, but the following conditions must be met: ● The equipment operates at a temperature of over 45°C (113°F) consecutively for at most 96 hours in one year. ● The equipment operates at a temperature of over 45°C (113°F) for a total of no more than 360 hours in one year. ● The equipment operates at a temperature of over 45°C (113°F) for no more in 15 times in one year. The equipment may be damaged or experience unexpected exceptions if any of the preceding limits is exceeded. The equipment cannot start when the temperature is lower than 0°C (32°F). The maximum distance of optical modules used in these conditions cannot exceed 10 km.
Storage temperature	-40°C to +70°C (-40°F to +158°F)
Noise under normal temperature (27°C, sound power)	< 62.3 dB(A)
Relative humidity	5% to 95%, noncondensing
Operating altitude	0-5000 m (0-16404 ft.)
Certification	● EMC certification ● Safety certification ● Manufacturing certification
Part number	98010720

4.7.7 S6720-52X-PWH-SI

Version Mapping

Table 4-98 lists the mapping between the S6720-52X-PWH-SI chassis and software versions.

Table 4-98 Version mapping

Series	Model	Software Version
S6720-SI	S6720-52X-PWH-SI	V200R011C10 to V200R019C10 versions

Appearance and Structure

Figure 4-43 S6720-52X-PWH-SI appearance

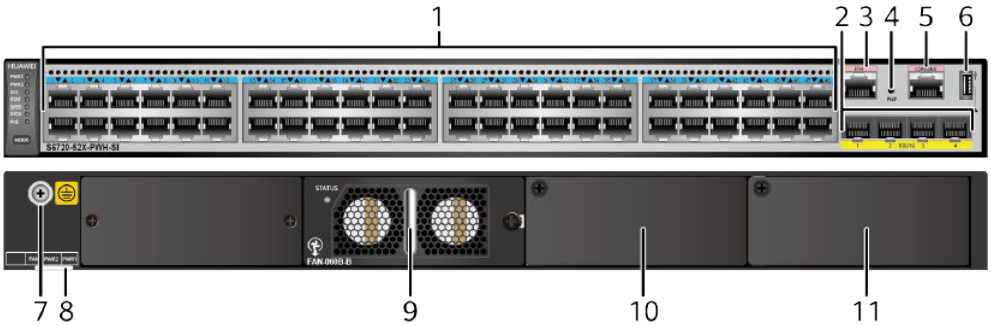

1	Forty-eight PoE++ 100M/1000M/2.5GE/5GE/10GE BASE-T ports (MultiGE port)	2	Four 10GE SFP+ ports Applicable modules and cables: • **GE optical module** • **GE-CWDM optical module** • **GE-DWDM optical module** • **GE copper module (100M/1000M auto-sensing)** • **10GE SFP+ optical module (OSXD22N00 not supported)** • **10GE-CWDM optical module** • **10GE-DWDM optical module** • **1 m, 3 m, 5 m, and 10 m SFP+ high-speed copper cables** • **3 m and 10 m SFP+ AOC cables** • **0.5 m and 1.5 m SFP+ dedicated stack copper cables (used for zero-configuration stacking, supported in V200R011C10 and later versions)**
3	One ETH management port	4	One PNP button **NOTICE** Applicable in V200R012C00 and later versions: To restore the factory settings and reset the switch, hold down the button for at least 6 seconds. To reset the switch, press the button. Resetting the switch will cause service interruption. Exercise caution when you press the PNP button.
5	One console port	6	One USB port
7	Ground screw **NOTE** It is used with a **ground cable**.	8	ESN label **NOTE** You can draw it out to view the ESN and MAC address of the switch.

9	Fan slot **NOTE** Applicable fan module: **6.5 FAN-060B-B (Fan box (B, FAN panel side exhaust))**	10	Power module slot 2 **NOTE** Applicable power modules: • **650 W DC PoE power module** • **1150 W AC PoE power module** • **1000 W AC PoE power module** (applicable in V200R013C00 and later versions)
11	Power module slot 1 **NOTE** Applicable power modules: • **650 W DC PoE power module** • **1150 W AC PoE power module** • **1000 W AC PoE power module** (applicable in V200R013C00 and later versions)	-	-

Interface Description

100M/1000M/2.5GE/5GE/10GE BASE-T port (MultiGE port)

A 100M/1000M/2.5GE/5GE/10GE BASE-T port (MultiGE port) sends and receives service data at 100 Mbit/s, 1 Gbit/s, 2.5 Gbit/s, 5 Gbit/s, or 10 Gbit/s, and must use an **Ethernet cable**. If the 2.5 Gbit/s or 5 Gbit/s speed is required, the port must use an Ethernet cable of Cat5e or higher category. If the 10 Gbit/s speed is required, the port must use an Ethernet cable of Cat6A F/UTP or higher category. **Table 4-99** describes the attributes of a 100M/1000M/2.5GE/5GE/10GE BASE-T port.

Table 4-99 Attributes of a 100M/1000M/2.5GE/5GE/10GE BASE-T port

Attribute	Description
Connector type	RJ45
Standards compliance	IEEE802.3u, IEEE802.3ab, IEEE802.3bz, IEEE802.3an, mgbase-t
Working Mode	100/1000/2500/5000/10000 Mbit/s auto-sensing

Table 4-100 lists the maximum transmission distances of different cables on MultiGE ports.

Table 4-100 Maximum transmission distances of different cables on MultiGE ports

Cable Type (6-a-1 Bundle)	MultiGE Port (Different Rates)			
	48 x 100M/ 1000M	48 x 2.5GE	48 x 5GE	48 x 10GE
Category 5e unshielded twisted pair (Cat5e UTP)	100 m	100 m	• 55 m • 100 m (6-a-1 bundle only for the first 30 m) Not recommended due to high risk	Not supported
Category 5e shielded twisted pair (Cat5e STP)	100 m	100 m	100 m	Not supported
Category 6 unshielded twisted pair (Cat6 UTP)	100 m	100 m	100 m Not recommended due to high risk	Not supported
Category 6 shielded twisted pair (Cat6 STP)	100 m	100 m	100 m	Not supported
Category 6A unshielded twisted pair (Cat6A U/UTP)	100 m	100 m	100 m Not recommended due to high risk	Not supported
Category 6A foiled/ unshielded twisted pair (Cat6A F/UTP)	100 m	100 m	100 m	100 m
Category 6A shielded twisted pair (Cat6A STP)	100 m	100 m	100 m	100 m
Category 7 twisted pair (Cat7)	100 m	100 m	100 m	100 m

NOTE

6-a-1 stands for the six-around-one cable bundle mode, with one cable in the center and six cables bundled evenly around it.

Some cables pose high risks and are not recommended for the following reasons:

- 802.3bz requires that the ALSNR value for alien crosstalk between Ethernet cables be greater than 0, but the standards for Cat5e and Cat6 unshielded twisted pairs do not specify the required ALSNR value. Therefore, such cables may not meet the crosstalk requirement in 802.3bz, causing severe problems such as continuous packet loss.
- According the cabling specification TIA TSB-5021, using Cat5e and Cat6 cables for 5G poses high risks.
- Currently, no clear onsite testing or evaluation method is available for checking whether ALSNR of cables conforms to 802.3bz.

If Cat5e and Cat6 unshielded twisted pairs do not meet the 5G requirement, you are advised to replace them with shielded twisted pairs or reduce the rate of ports to 2.5G.

If Cat5E, Cat6, or Cat6A unshielded twisted pairs are used on electrical ports working at 10 Gbit/s, severe problems such as continuous packet loss or port flapping may occur.

10GE SFP+ port

A 10GE SFP+ Ethernet optical port supports auto-sensing to 1000 Mbit/s. It sends and receives service data at 1000 Mbit/s or 10 Gbit/s. **Table 4-101** describes the attributes of a 10GE SFP+ Ethernet optical port.

Table 4-101 Attributes of a 10GE SFP+ port

Attribute	Description
Connector type	LC/PC
Optical port attributes	Depend on the optical module used
Standards compliance	IEEE802.3ae
Working mode	GE/10GE auto-sensing

Console port

The console port is connected to a console for on-site configuration. The port must use a **console cable**. The console port is used when a switch is powered on for the first time. For details about the attributes of a console port, see **Table 4-102**.

Table 4-102 Attributes of a console port

Attribute	Description
Connector type	RJ45
Standards compliance	RS-232

Attribute	Description
Working mode	Duplex Universal Asynchronous Receiver/Transmitter (UART)
Baud rate	9600 bit/s, 19200 bit/s, 38400 bit/s, 57600 bit/s, or 115200 bit/s Default value: 9600 bit/s

ETH management port

You can connect a switch to a configuration terminal or network management workstation through the ETH management port to configure the switch locally or remotely. The port must use an **Ethernet cable**. You can choose to download the software package through the ETH management port in the BootLoad menu. File transfer through the ETH management port is faster than transfer through the console port. **Table 4-103** describes the attributes of an ETH management port.

Table 4-103 Attributes of an ETH management port

Attribute	Description
Connector type	RJ45
Standards compliance	IEEE802.3
Working mode	10/100 Mbit/s auto-sensing
Maximum transmission distance	100 m

In V200R012C00 and later versions, you can log in to the switch that contains the ETH management port for the first time through the ETH port. For details, see "First Login to a Switch" in the *Configuration Guide - Basic Configuration*. If you have logged in to the device for the first time by pressing and holding the MODE button for 6 seconds or longer and saved the configuration, the default configuration on the ETH port will be cleared. In this case, you cannot log in to the switch for the first time through the ETH port. You are advised to log in to the switch for the first time through the ETH port.

USB port

The USB port can have a USB flash drive connected to upgrade the switch, or transfer configuration files or other files. The USB port can only connect to a USB flash drive that complies with USB 2.0.

NOTE

USB flash drives from different vendors differ in model compatibility and drivers. If a USB flash drive cannot be used, try to replace it with another one from a mainstream vendor. Switches support a maximum of 128 GB USB flash drives.

Indicator Description

The S6720-52X-PWH-SI has the same types of indicators as the S6720-32C-PWH-SI-AC. For details, see **Indicator Description**.

Power Supply Configuration

The S6720-52X-PWH-SI is a PoE switch. It has two power module slots, each of which can have a 650 W, 1150 W, or 1000 W (applicable in V200R013C00 and later versions) power module installed. A 650 W DC power module and a 1150 W AC power module can be used together in the switch. A 1150 W AC power module and a 1000 W AC power module can be used together in the switch. **Table 4-104** lists its power supply configurations.

Table 4-104 Power supply configurations

Power Module 1	Power Module 2	Available PoE Power	Maximum Number of Ports (Fully Loaded)
650 W	–	369.6 W	• 802.3af (15.4 W per port): 24 • 802.3at (30 W per port): 12 • 802.3bt (60 W per port): 6
650 W	650 W	739.2 W	• 802.3af (15.4 W per port): 24 • 802.3at (30 W per port): 24 • 802.3bt (60 W per port): 12
1150 W (220 V)	–	785.4 W	• 802.3af (15.4 W per port): 48 • 802.3at (30 W per port): 26 • 802.3bt (60 W per port): 13
1150 W (220 V)	1150 W (220 V)	1440 W	• 802.3af (15.4 W per port): 48 • 802.3at (30 W per port): 48 • 802.3bt (60 W per port): 24

Power Module 1	Power Module 2	Available PoE Power	Maximum Number of Ports (Fully Loaded)
1150 W (110 V)	–	446.6 W	• 802.3af (15.4 W per port): 29 • 802.3at (30 W per port): 14 • 802.3bt (60 W per port): 7
1150 W (110 V)	1150 W (110 V)	893.2 W	• 802.3af (15.4 W per port): 48 • 802.3at (30 W per port): 29 • 802.3bt (60 W per port): 14
1000 W (220 V)	-	754.6 W	• 802.3af (15.4 W per port): 48 • 802.3at (30 W per port): 25 • 802.3bt (60 W per port): 12
1000 W (220 V)	1000 W (220 V)	1440 W	• 802.3af (15.4 W per port): 48 • 802.3at (30 W per port): 48 • 802.3bt (60 W per port): 24
1000 W (110 V)	-	646.8 W	• 802.3af (15.4 W per port): 42 • 802.3at (30 W per port): 21 • 802.3bt (60 W per port): 10
1000 W (110 V)	1000 W (110 V)	1293.6 W	• 802.3af (15.4 W per port): 48 • 802.3at (30 W per port): 43 • 802.3bt (60 W per port): 21

Power Module 1	Power Module 2	Available PoE Power	Maximum Number of Ports (Fully Loaded)
1000 W (220 V)	1150 W (220 V)	1440 W	• 802.3af (15.4 W per port): 48 • 802.3at (30 W per port): 48 • 802.3bt (60 W per port): 24
1150 W (220 V)	1000 W (220 V)	1440 W	• 802.3af (15.4 W per port): 48 • 802.3at (30 W per port): 48 • 802.3bt (60 W per port): 24
1000 W (110 V)	1150 W (110 V)	893.2 W	• 802.3af (15.4 W per port): 48 • 802.3at (30 W per port): 29 • 802.3bt (60 W per port): 14
1150 W (110 V)	1000 W (110 V)	893.2 W	• 802.3af (15.4 W per port): 48 • 802.3at (30 W per port): 29 • 802.3bt (60 W per port): 14

NOTE

When a switch has two power modules installed, the two power modules work in redundancy mode to provide power for the chassis and in load balancing mode to provide power for PDs.

Figure 4-44 shows the power supply mode of dual AC PoE power modules (PWR1 and PWR2). After AC power is transmitted to the PWR modules, the PWR modules provide 12 V and -53 V outputs. The outputs are combined on the motherboard, which then provides 12 V voltage for the switch and -53 V voltage for the PDs.

Figure 4-44 Power supply by dual AC PoE power modules

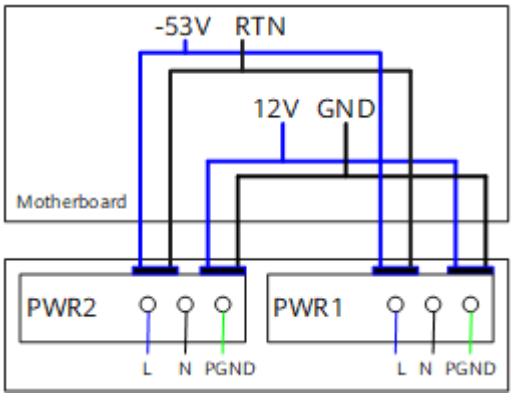

L: live wire N: neutral wire PGND: protection ground wire GND: 12 V reference ground RTN: -53 V reference ground

Figure 4-45 shows the power supply connections of dual DC PoE power modules. After DC power is transmitted to the PWR module, the PWR module provides 12 V and -53 V output voltages, and the motherboard provides 12 V voltage for the entire device and -53 V voltage for the PDs.

Figure 4-45 Power supply connections of dual DC PoE power modules

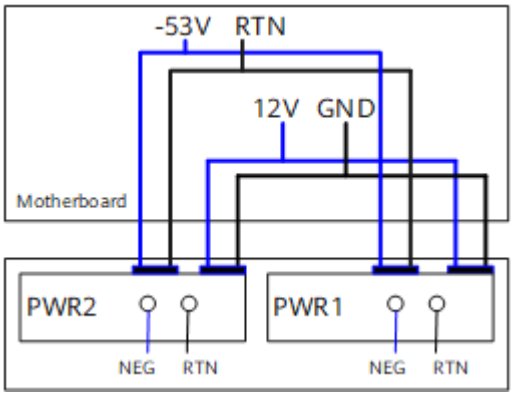

NEG: negative wire RTN: positive wire GND: 12 V reference ground RTN: -53 V reference ground

Heat Dissipation

The S6720-52X-PWH-SI uses pluggable fan modules for forced air cooling. Air flows in from the left, right, and front sides, and exhausts from the rear panel.

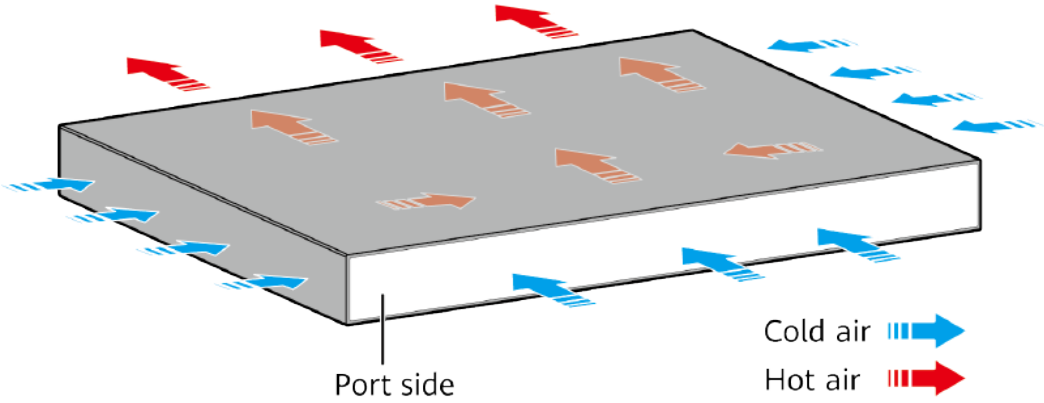

NOTE

This figure only shows the airflow direction and does not depict the actual device.

Technical Specifications

Table 4-105 lists technical specifications of the S6720-52X-PWH-SI.

Table 4-105 Technical specifications

Item	Description
Memory (RAM)	1 GB
Flash	512 MB in total. To view the available flash memory size, run the **display version** command.
Mean time between failures (MTBF)	35.1 years
Mean time to repair (MTTR)	2 hours
Availability	> 0.99999
Service port surge protection	Common mode: ±7 kV
Power supply surge protection	• Using 1000 W AC power modules: ±6 kV in differential mode, ±6 kV in common mode • Using 1150 W AC power modules: ±2 kV in differential mode, ±4 kV in common mode

Item	Description
Dimensions (H x W x D)	• Basic dimensions (excluding the parts protruding from the body): 44.4 mm x 442.0 mm x 425.0 mm (1.75 in. x 17.4 in. x 16.73 in.) • Maximum dimensions (the depth is the distance from ports on the front panel to the handle on the rear panel): 44.4 mm x 442.0 mm x 451.3 mm (1.75 in. x 17.4 in. x 17.77 in.) When 1150 W power modules are installed, they stretch out from the chassis. Therefore, the total depth of the switch changes to 541.1 mm (21.3 in.).
Weight (with packaging)	7 kg (15.43 lb)
Stack ports	Any MultiGE or 10GE SFP+ ports (a maximum of 16 physical ports)
RTC	Supported
RPS	Not supported
PoE	Supported
Rated voltage range	100 V AC to 240 V AC, 50/60 Hz -48 V DC to -60 V DC
Maximum voltage range	90 V AC to 264 V AC, 47 Hz to 63 Hz -38.4 V DC to -72 V DC
Maximum power consumption (100% throughput, full speed of fans)	• Using 650 W DC power modules – Not providing the PoE function: 207.4 W – 100% PoE loads: 940 W (system power consumption: 200.8 W, PoE: 739.2 W) • Using 1150 W AC or 1000 W AC power modules – Not providing the PoE function: 236.8 W – 100% PoE loads: 1724.4 W (system power consumption: 284.4 W, PoE: 1440 W)
Typical power consumption (30% of traffic load, tested according to ATIS standard)	159.5 W (without PoE)
Operating temperature	0°C to 45°C (32°F to 113°F) at an altitude of 0-1800 m (0-5906 ft.) **NOTE** When the altitude is 1800-5000 m (5906-16404 ft.), the highest operating temperature reduces by 1°C (1.8°F) every time the altitude increases by 220 m (722 ft.).

Item	Description
Short-term operating temperature	-5°C to +50°C (23°F to 122°F) at an altitude of 0-1800 m (0-5906 ft.) **NOTE** When the altitude is 1800-5000 m (5906-16404 ft.), the highest operating temperature reduces by 1°C (1.8°F) every time the altitude increases by 220 m (722 ft.). The equipment can operate beyond the normal operating temperature range for a short-term period, but the following conditions must be met: ● The equipment operates at a temperature of over 45°C (113°F) consecutively for at most 96 hours in one year. ● The equipment operates at a temperature of over 45°C (113°F) for a total of no more than 360 hours in one year. ● The equipment operates at a temperature of over 45°C (113°F) for no more in 15 times in one year. The equipment may be damaged or experience unexpected exceptions if any of the preceding limits is exceeded. The equipment cannot start when the temperature is lower than 0°C (32°F). The maximum distance of optical modules used in these conditions cannot exceed 10 km.
Storage temperature	-40°C to +70°C (-40°F to +158°F)
Noise under normal temperature (27°C, sound power)	< 66.4 dB(A)
Relative humidity	5% to 95%, noncondensing
Operating altitude	0-5000 m (0-16404 ft.)
Certification	● EMC certification ● Safety certification ● Manufacturing certification
Part number	98010743

4.7.8 S6720-56C-PWH-SI-AC

Version Mapping

Table 4-106 lists the mapping between the S6720-56C-PWH-SI-AC chassis and software versions.

Table 4-106 Version mapping

Series	Model	Software Version
S6720-SI	S6720-56C-PWH-SI-AC	V200R011C10 to V200R019C10 versions

Appearance and Structure

Figure 4-46 S6720-56C-PWH-SI-AC appearance

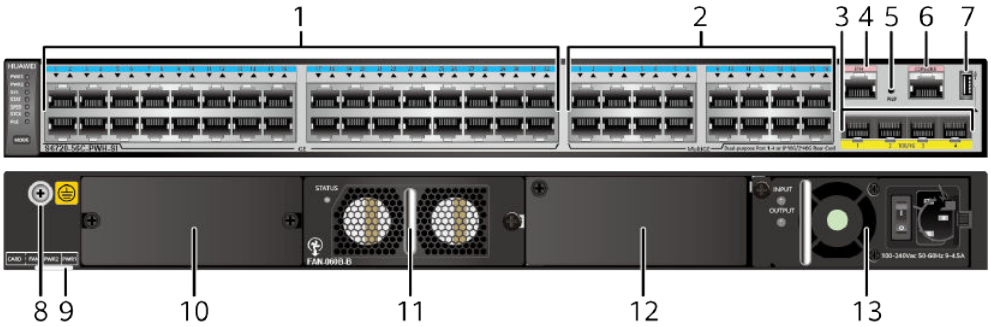

1	Thirty-two PoE+ + 10/100/1000BASE-T ports	2	Sixteen PoE++ 100M/1000M/2.5GE/5GE/10GE BASE-T ports (MultiGE port)

3	Four 10GE SFP+ ports Applicable modules and cables: • **GE optical module** • **GE-CWDM optical module** • **GE-DWDM optical module** • **GE copper module (100M/1000M auto-sensing)** • **10GE SFP+ optical module (OSXD22N00 not supported)** • **10GE-CWDM optical module** • **10GE-DWDM optical module** • **1 m, 3 m, 5 m, and 10 m SFP+ high-speed copper cables** • **3 m and 10 m SFP+ AOC cables** • **0.5 m and 1.5 m SFP+ dedicated stack copper cables (used for zero-configuration stacking, supported in V200R011C10 and later versions)** **NOTE** The four 10GE SFP+ ports on the front panel cannot be used simultaneously with ports on the rear card (except the 4-port 10GE rear card). If a rear card other than a 4-port 10GE rear card is installed in the switch, only the ports on the front panel can be used by default. • V200R011 version: To use the port on the rear card, run the **set device port-on-card enable** command. Then the four 10GE SFP+ ports on the front panel cannot be used. • V200R012 and later versions: To use the port on the rear card, run the **undo set device port-config-mode port-on-board enable** command. Then the four 10GE SFP+ ports on the front panel cannot be used.	4	One ETH management port

5	One PNP button **NOTICE** Applicable in V200R012C00 and later versions: To restore the factory settings and reset the switch, hold down the button for at least 6 seconds. To reset the switch, press the button. Resetting the switch will cause service interruption. Exercise caution when you press the PNP button.	6	One console port
7	One USB port	8	Ground screw **NOTE** It is used with a **ground cable**.
9	ESN label **NOTE** You can draw it out to view the ESN and MAC address of the switch.	10	Rear card slot **NOTE** Cards supported: • **ES5D21Q02Q00** • **ES5D21X04S01**
11	Fan slot **NOTE** Applicable fan module: **6.5 FAN-060B-B (Fan box (B, FAN panel side exhaust))**	12	Power module slot 2 **NOTE** Applicable power modules: • **580 W AC PoE power module** • **650 W DC PoE power module** • **1000 W AC PoE power module** (applicable in V200R013C00 and later versions)
13	Power module slot 1 **NOTE** Applicable power modules: • **580 W AC PoE power module** • **650 W DC PoE power module** • **1000 W AC PoE power module** (applicable in V200R013C00 and later versions)	-	-

Interface Description

10/100/1000BASE-T port

A 10/100/1000BASE-T Ethernet electrical port sends and receives service data at 10/100/1000 Mbit/s, and must use an **Ethernet cable**. **Table 4-107** describes the attributes of a 10/100/1000BASE-T Ethernet electrical port.

Table 4-107 Attributes of a 10/100/1000BASE-T Ethernet electrical port

Attribute	Description
Connector type	RJ45
Standards compliance	IEEE802.3, IEEE802.3u, IEEE802.3ab
Working mode	10/100/1000 Mbit/s auto-sensing
Maximum transmission distance	100 m

100M/1000M/2.5GE/5GE/10GE BASE-T port (MultiGE port)

A 100M/1000M/2.5GE/5GE/10GE BASE-T port (MultiGE port) sends and receives service data at 100 Mbit/s, 1 Gbit/s, 2.5 Gbit/s, 5 Gbit/s, or 10 Gbit/s, and must use an **Ethernet cable**. If the 2.5 Gbit/s or 5 Gbit/s speed is required, the port must use an Ethernet cable of Cat5e or higher category. If the 10 Gbit/s speed is required, the port must use an Ethernet cable of Cat6A F/UTP or higher category. **Table 4-108** describes the attributes of a 100M/1000M/2.5GE/5GE/10GE BASE-T port.

Table 4-108 Attributes of a 100M/1000M/2.5GE/5GE/10GE BASE-T port

Attribute	Description
Connector type	RJ45
Standards compliance	IEEE802.3u, IEEE802.3ab, IEEE802.3bz, IEEE802.3an, mgbase-t
Working Mode	100/1000/2500/5000/10000 Mbit/s auto-sensing

Table 4-109 lists the maximum transmission distances of different cables on MultiGE ports.

Table 4-109 Maximum transmission distances of different cables on MultiGE ports

Cable Type (6-a-1 Bundle)	MultiGE Port (Different Rates)			
	16 x 100M/ 1000M	**16 x 2.5GE**	**16 x 5GE**	**16 x 10GE**
Category 5e unshielded twisted pair (Cat5e UTP)	100 m	100 m	• 55 m • 100 m (6-a-1 bundle only for the first 30 m) Not recommended due to high risk	Not supported
Category 5e shielded twisted pair (Cat5e STP)	100 m	100 m	100 m	Not supported
Category 6 unshielded twisted pair (Cat6 UTP)	100 m	100 m	100 m Not recommended due to high risk	Not supported
Category 6 shielded twisted pair (Cat6 STP)	100 m	100 m	100 m	Not supported
Category 6A unshielded twisted pair (Cat6A U/UTP)	100 m	100 m	100 m Not recommended due to high risk	Not supported
Category 6A foiled/ unshielded twisted pair (Cat6A F/UTP)	100 m	100 m	100 m	100 m
Category 6A shielded twisted pair (Cat6A STP)	100 m	100 m	100 m	100 m
Category 7 twisted pair (Cat7)	100 m	100 m	100 m	100 m

NOTE

6-a-1 stands for the six-around-one cable bundle mode, with one cable in the center and six cables bundled evenly around it.

Some cables pose high risks and are not recommended for the following reasons:

- 802.3bz requires that the ALSNR value for alien crosstalk between Ethernet cables be greater than 0, but the standards for Cat5e and Cat6 unshielded twisted pairs do not specify the required ALSNR value. Therefore, such cables may not meet the crosstalk requirement in 802.3bz, causing severe problems such as continuous packet loss.
- According the cabling specification TIA TSB-5021, using Cat5e and Cat6 cables for 5G poses high risks.
- Currently, no clear onsite testing or evaluation method is available for checking whether ALSNR of cables conforms to 802.3bz.

If Cat5e and Cat6 unshielded twisted pairs do not meet the 5G requirement, you are advised to replace them with shielded twisted pairs or reduce the rate of ports to 2.5G.

If Cat5E, Cat6, or Cat6A unshielded twisted pairs are used on electrical ports working at 10 Gbit/s, severe problems such as continuous packet loss or port flapping may occur.

10GE SFP+ port

A 10GE SFP+ Ethernet optical port supports auto-sensing to 1000 Mbit/s. It sends and receives service data at 1000 Mbit/s or 10 Gbit/s. **Table 4-110** describes the attributes of a 10GE SFP+ Ethernet optical port.

Table 4-110 Attributes of a 10GE SFP+ port

Attribute	Description
Connector type	LC/PC
Optical port attributes	Depend on the optical module used
Standards compliance	IEEE802.3ae
Working mode	GE/10GE auto-sensing

Console port

The console port is connected to a console for on-site configuration. The port must use a **console cable**. The console port is used when a switch is powered on for the first time. For details about the attributes of a console port, see **Table 4-111**.

Table 4-111 Attributes of a console port

Attribute	Description
Connector type	RJ45
Standards compliance	RS-232

Attribute	Description
Working mode	Duplex Universal Asynchronous Receiver/Transmitter (UART)
Baud rate	9600 bit/s, 19200 bit/s, 38400 bit/s, 57600 bit/s, or 115200 bit/s Default value: 9600 bit/s

ETH management port

You can connect a switch to a configuration terminal or network management workstation through the ETH management port to configure the switch locally or remotely. The port must use an **Ethernet cable**. You can choose to download the software package through the ETH management port in the BootLoad menu. File transfer through the ETH management port is faster than transfer through the console port. **Table 4-112** describes the attributes of an ETH management port.

Table 4-112 Attributes of an ETH management port

Attribute	Description
Connector type	RJ45
Standards compliance	IEEE802.3
Working mode	10/100 Mbit/s auto-sensing
Maximum transmission distance	100 m

In V200R012C00 and later versions, you can log in to the switch that contains the ETH management port for the first time through the ETH port. For details, see "First Login to a Switch" in the *Configuration Guide - Basic Configuration*. If you have logged in to the device for the first time by pressing and holding the MODE button for 6 seconds or longer and saved the configuration, the default configuration on the ETH port will be cleared. In this case, you cannot log in to the switch for the first time through the ETH port. You are advised to log in to the switch for the first time through the ETH port.

USB port

The USB port can have a USB flash drive connected to upgrade the switch, or transfer configuration files or other files. The USB port can only connect to a USB flash drive that complies with USB 2.0.

NOTE

USB flash drives from different vendors differ in model compatibility and drivers. If a USB flash drive cannot be used, try to replace it with another one from a mainstream vendor. Switches support a maximum of 128 GB USB flash drives.

Indicator Description

The S6720-56C-PWH-SI-AC has the same types of indicators as the S6720-32C-PWH-SI-AC. For details, see **Indicator Description**.

Power Supply Configuration

The S6720-56C-PWH-SI-AC is a PoE switch. It provides two power module slots, each supporting a 580 W, 650 W, or 1000 W (applicable in V200R013C00 and later versions) power module. A 580 W AC power module and a 650 W DC power module can be used together. A 580 W AC power module and a 1000 W AC power module can be used together. **Table 4-113** lists its power supply configurations.

Table 4-113 Power supply configurations

Power Module 1	Power Module 2	Available PoE Power	Maximum Number of Ports (Fully Loaded)
580 W or 650 W	–	369.6 W	• 802.3af (15.4 W per port): 24 • 802.3at (30 W per port): 12 • 802.3bt (60 W per port): 6
580 W or 650 W	580 W or 650 W	739.2 W	• 802.3af (15.4 W per port): 48 • 802.3at (30 W per port): 24 • 802.3bt (60 W per port): 12
1000 W (220 V)	-	754.6 W	• 802.3af (15.4 W per port): 48 • 802.3at (30 W per port): 25 • 802.3bt (60 W per port): 12
1000 W (220 V)	1000 W (220 V)	1440 W	• 802.3af (15.4 W per port): 48 • 802.3at (30 W per port): 48 • 802.3bt (60 W per port): 24

Power Module 1	Power Module 2	Available PoE Power	Maximum Number of Ports (Fully Loaded)
1000 W (110 V)	-	754.6 W	• 802.3af (15.4 W per port): 48 • 802.3at (30 W per port): 25 • 802.3bt (60 W per port): 12
1000 W (110 V)	1000 W (110 V)	1440 W	• 802.3af (15.4 W per port): 48 • 802.3at (30 W per port): 48 • 802.3bt (60 W per port): 24
1000 W	580 W	739.2 W	• 802.3af (15.4 W per port): 48 • 802.3at (30 W per port): 24 • 802.3bt (60 W per port): 12
580 W	1000 W	739.2 W	• 802.3af (15.4 W per port): 48 • 802.3at (30 W per port): 24 • 802.3bt (60 W per port): 12

NOTE

When a switch has two power modules installed, the two power modules work in redundancy mode to provide power for the chassis and in load balancing mode to provide power for PDs.

Figure 4-47 shows the power supply mode of dual AC PoE power modules (PWR1 and PWR2). After AC power is transmitted to the PWR modules, the PWR modules provide 12 V and -53 V outputs. The outputs are combined on the motherboard, which then provides 12 V voltage for the switch and -53 V voltage for the PDs.

Figure 4-47 Power supply by dual AC PoE power modules

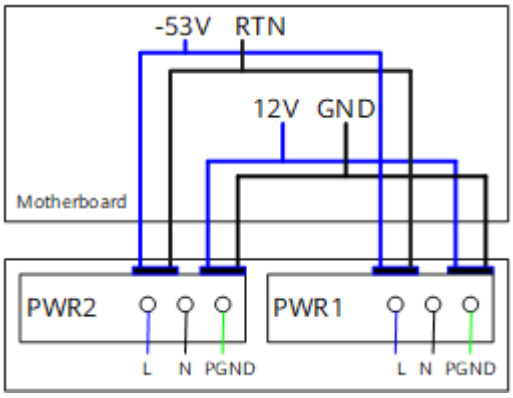

L: live wire N: neutral wire PGND: protection ground wire GND: 12 V reference ground RTN: -53 V reference ground

Figure 4-48 shows the power supply connections of dual DC PoE power modules. After DC power is transmitted to the PWR module, the PWR module provides 12 V and -53 V output voltages, and the motherboard provides 12 V voltage for the entire device and -53 V voltage for the PDs.

Figure 4-48 Power supply connections of dual DC PoE power modules

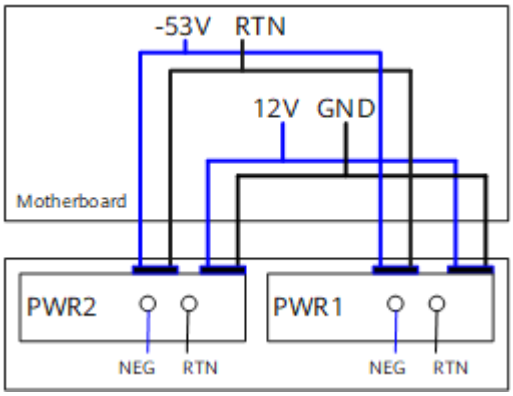

NEG: negative wire RTN: positive wire GND: 12 V reference ground RTN: -53 V reference ground

Heat Dissipation

The S6720-56C-PWH-SI-AC uses pluggable fan modules for forced air cooling. Air flows in from the left, right, and front sides, and exhausts from the rear panel.

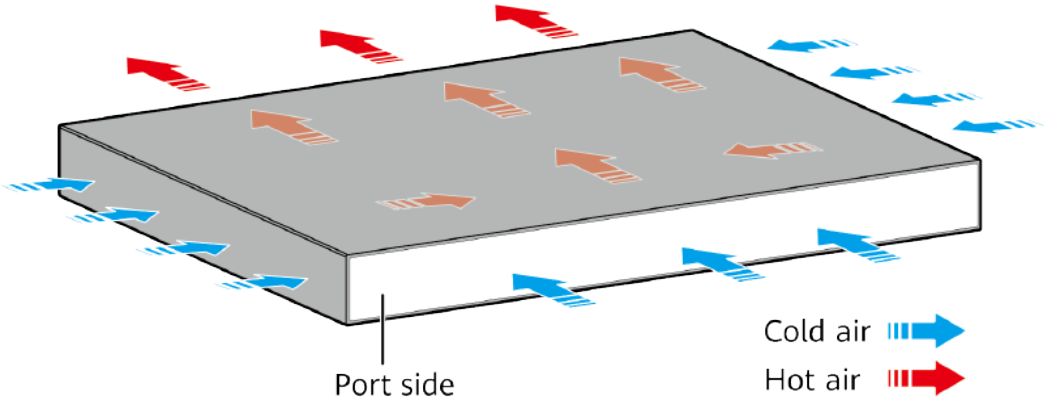

NOTE

This figure only shows the airflow direction and does not depict the actual device.

Technical Specifications

Table 4-114 lists technical specifications of the S6720-56C-PWH-SI-AC.

Table 4-114 Technical specifications

Item	Description
Memory (RAM)	1 GB
Flash	512 MB in total. To view the available flash memory size, run the **display version** command.
Mean time between failures (MTBF)	23.9 years
Mean time to repair (MTTR)	2 hours
Availability	> 0.99999
Service port surge protection	Common mode: ±6 kV
Power supply surge protection	• Using 580 W AC or 1000 W AC power modules: ±6 kV in differential mode, ±6 kV in common mode • Using 650 W DC power modules: ±2 kV in differential mode, ±4 kV in common mode
Dimensions (H x W x D)	• Basic dimensions (excluding the parts protruding from the body): 44.4 mm x 442.0 mm x 425.0 mm (1.75 in. x 17.4 in. x 16.73 in.) • Maximum dimensions (the depth is the distance from ports on the front panel to the handle on the rear panel): 44.4 mm x 442.0 mm x 451.3 mm (1.75 in. x 17.4 in. x 17.77 in.)

Item	Description
Weight (with packaging)	9.3 kg (20.5 lb)
Stack ports	Any MultiGE, 10GE SFP+, or 40GE QSFP+ ports (a maximum of 16 physical ports)
RTC	Supported
RPS	Not supported
PoE	Supported
Rated voltage range	100 V AC to 240 V AC, 50/60 Hz -48 V DC to -60 V DC
Maximum voltage range	90 V AC to 264 V AC, 47 Hz to 63 Hz -38.4 V DC to -72 V DC
Maximum power consumption (100% throughput, full speed of fans)	● Using 650 W DC power modules or 580 W AC power modules – Not providing the PoE function: 120.5 W (without card) – 100% PoE loads: 1068.1 W (system power consumption: 328.9 W, PoE: 739.2 W, without card) ● Using 1000 W AC power modules – Not providing the PoE function: 120.5 W (without card) – 100% PoE loads: 1995.4 W (system power consumption: 555.4 W, PoE: 1440 W, without card)
Typical power consumption (30% of traffic load, tested according to ATIS standard)	91.01 W (not providing the PoE function, without card)
Operating temperature	0°C to 45°C (32°F to 113°F) at an altitude of 0-1800 m (0-5906 ft.) **NOTE** When the altitude is 1800-5000 m (5906-16404 ft.), the highest operating temperature reduces by 1°C (1.8°F) every time the altitude increases by 220 m (722 ft.).

Item	Description
Short-term operating temperature	-5°C to +50°C (23°F to 122°F) at an altitude of 0-1800 m (0-5906 ft.) **NOTE** When the altitude is 1800-5000 m (5906-16404 ft.), the highest operating temperature reduces by 1°C (1.8°F) every time the altitude increases by 220 m (722 ft.). The equipment can operate beyond the normal operating temperature range for a short-term period, but the following conditions must be met: ● The equipment operates at a temperature of over 45°C (113°F) consecutively for at most 96 hours in one year. ● The equipment operates at a temperature of over 45°C (113°F) for a total of no more than 360 hours in one year. ● The equipment operates at a temperature of over 45°C (113°F) for no more in 15 times in one year. The equipment may be damaged or experience unexpected exceptions if any of the preceding limits is exceeded. The equipment cannot start when the temperature is lower than 0°C (32°F). The maximum distance of optical modules used in these conditions cannot exceed 10 km.
Storage temperature	-40°C to +70°C (-40°F to +158°F)
Noise under normal temperature (27°C, sound power)	< 60.5 dB(A)
Relative humidity	5% to 95%, noncondensing
Operating altitude	0-5000 m (0-16404 ft.)
Certification	● EMC certification ● Safety certification ● Manufacturing certification
Part number	98010727

4.7.9 S6720-56C-PWH-SI

Version Mapping

Table 4-115 lists the mapping between the S6720-56C-PWH-SI chassis and software versions.

Table 4-115 Version mapping

Series	Model	Software Version
S6720-SI	S6720-56C-PWH-SI	V200R011C10 to V200R019C10 versions

Appearance and Structure

Figure 4-49 S6720-56C-PWH-SI appearance

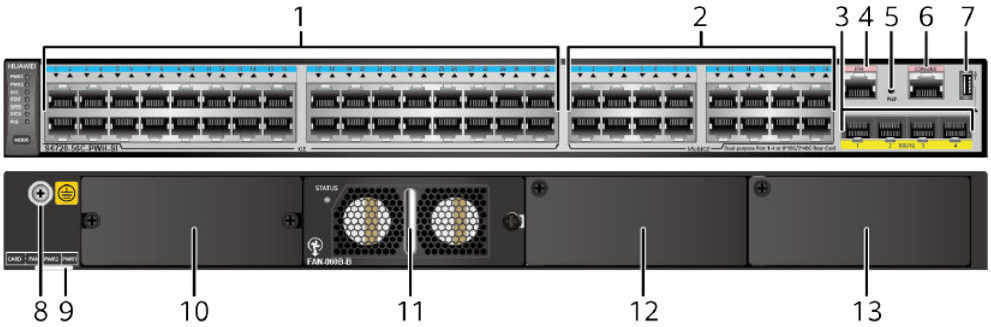

1	Thirty-two PoE+ + 10/100/1000BASE-T ports	2	Sixteen PoE++ 100M/1000M/ 2.5GE/5GE/10GE BASE-T ports (MultiGE port)

3	Four 10GE SFP+ ports Applicable modules and cables: • **GE optical module** • **GE-CWDM optical module** • **GE-DWDM optical module** • **GE copper module (100M/1000M auto-sensing)** • **10GE SFP+ optical module (OSXD22N00 not supported)** • **10GE-CWDM optical module** • **10GE-DWDM optical module** • **1 m, 3 m, 5 m, and 10 m SFP+ high-speed copper cables** • **3 m and 10 m SFP+ AOC cables** • **0.5 m and 1.5 m SFP+ dedicated stack copper cables (used for zero-configuration stacking, supported in V200R011C10 and later versions)** **NOTE** The four 10GE SFP+ ports on the front panel cannot be used simultaneously with ports on the rear card (except the 4-port 10GE rear card). If a rear card other than a 4-port 10GE rear card is installed in the switch, only the ports on the front panel can be used by default. • V200R011 version: To use the port on the rear card, run the **set device port-on-card enable** command. Then the four 10GE SFP+ ports on the front panel cannot be used. • V200R012 and later versions: To use the port on the rear card, run the **undo set device port-config-mode port-on-board enable** command. Then the four 10GE SFP+ ports on the front panel cannot be used.	4	One ETH management port

5	One PNP button **NOTICE** Applicable in V200R012C00 and later versions: To restore the factory settings and reset the switch, hold down the button for at least 6 seconds. To reset the switch, press the button. Resetting the switch will cause service interruption. Exercise caution when you press the PNP button.	6	One console port
7	One USB port	8	Ground screw **NOTE** It is used with a **ground cable**.
9	ESN label **NOTE** You can draw it out to view the ESN and MAC address of the switch.	10	Rear card slot **NOTE** Cards supported: • **ES5D21Q02Q00** • **ES5D21X04S01**
11	Fan slot **NOTE** Applicable fan module: **6.5 FAN-060B-B (Fan box (B, FAN panel side exhaust))**	12	Power module slot 2 **NOTE** Applicable power modules: • **580 W AC PoE power module** • **650 W DC PoE power module** • **1150 W AC PoE power module** • **1000 W AC PoE power module** (applicable in V200R013C00 and later versions)
13	Power module slot 1 **NOTE** Applicable power modules: • **580 W AC PoE power module** • **650 W DC PoE power module** • **1150 W AC PoE power module** • **1000 W AC PoE power module** (applicable in V200R013C00 and later versions)	-	-

Interface Description

10/100/1000BASE-T port

A 10/100/1000BASE-T Ethernet electrical port sends and receives service data at 10/100/1000 Mbit/s, and must use an **Ethernet cable**. **Table 4-116** describes the attributes of a 10/100/1000BASE-T Ethernet electrical port.

Table 4-116 Attributes of a 10/100/1000BASE-T Ethernet electrical port

Attribute	Description
Connector type	RJ45
Standards compliance	IEEE802.3, IEEE802.3u, IEEE802.3ab
Working mode	10/100/1000 Mbit/s auto-sensing
Maximum transmission distance	100 m

100M/1000M/2.5GE/5GE/10GE BASE-T port (MultiGE port)

A 100M/1000M/2.5GE/5GE/10GE BASE-T port (MultiGE port) sends and receives service data at 100 Mbit/s, 1 Gbit/s, 2.5 Gbit/s, 5 Gbit/s, or 10 Gbit/s, and must use an **Ethernet cable**. If the 2.5 Gbit/s or 5 Gbit/s speed is required, the port must use an Ethernet cable of Cat5e or higher category. If the 10 Gbit/s speed is required, the port must use an Ethernet cable of Cat6A F/UTP or higher category. **Table 4-117** describes the attributes of a 100M/1000M/2.5GE/5GE/10GE BASE-T port.

Table 4-117 Attributes of a 100M/1000M/2.5GE/5GE/10GE BASE-T port

Attribute	Description
Connector type	RJ45
Standards compliance	IEEE802.3u, IEEE802.3ab, IEEE802.3bz, IEEE802.3an, mgbase-t
Working Mode	100/1000/2500/5000/10000 Mbit/s auto-sensing

Table 4-118 lists the maximum transmission distances of different cables on MultiGE ports.

Table 4-118 Maximum transmission distances of different cables on MultiGE ports

Cable Type (6-a-1 Bundle)	MultiGE Port (Different Rates)			
	16 x 100M/ 1000M	16 x 2.5GE	16 x 5GE	16 x 10GE
Category 5e unshielded twisted pair (Cat5e UTP)	100 m	100 m	• 55 m • 100 m (6-a-1 bundle only for the first 30 m) Not recommended due to high risk	Not supported
Category 5e shielded twisted pair (Cat5e STP)	100 m	100 m	100 m	Not supported
Category 6 unshielded twisted pair (Cat6 UTP)	100 m	100 m	100 m Not recommended due to high risk	Not supported
Category 6 shielded twisted pair (Cat6 STP)	100 m	100 m	100 m	Not supported
Category 6A unshielded twisted pair (Cat6A U/UTP)	100 m	100 m	100 m Not recommended due to high risk	Not supported
Category 6A foiled/ unshielded twisted pair (Cat6A F/UTP)	100 m	100 m	100 m	100 m
Category 6A shielded twisted pair (Cat6A STP)	100 m	100 m	100 m	100 m
Category 7 twisted pair (Cat7)	100 m	100 m	100 m	100 m

NOTE

6-a-1 stands for the six-around-one cable bundle mode, with one cable in the center and six cables bundled evenly around it.

Some cables pose high risks and are not recommended for the following reasons:

- 802.3bz requires that the ALSNR value for alien crosstalk between Ethernet cables be greater than 0, but the standards for Cat5e and Cat6 unshielded twisted pairs do not specify the required ALSNR value. Therefore, such cables may not meet the crosstalk requirement in 802.3bz, causing severe problems such as continuous packet loss.
- According the cabling specification TIA TSB-5021, using Cat5e and Cat6 cables for 5G poses high risks.
- Currently, no clear onsite testing or evaluation method is available for checking whether ALSNR of cables conforms to 802.3bz.

If Cat5e and Cat6 unshielded twisted pairs do not meet the 5G requirement, you are advised to replace them with shielded twisted pairs or reduce the rate of ports to 2.5G.

If Cat5E, Cat6, or Cat6A unshielded twisted pairs are used on electrical ports working at 10 Gbit/s, severe problems such as continuous packet loss or port flapping may occur.

10GE SFP+ port

A 10GE SFP+ Ethernet optical port supports auto-sensing to 1000 Mbit/s. It sends and receives service data at 1000 Mbit/s or 10 Gbit/s. **Table 4-119** describes the attributes of a 10GE SFP+ Ethernet optical port.

Table 4-119 Attributes of a 10GE SFP+ port

Attribute	Description
Connector type	LC/PC
Optical port attributes	Depend on the optical module used
Standards compliance	IEEE802.3ae
Working mode	GE/10GE auto-sensing

Console port

The console port is connected to a console for on-site configuration. The port must use a **console cable**. The console port is used when a switch is powered on for the first time. For details about the attributes of a console port, see **Table 4-120**.

Table 4-120 Attributes of a console port

Attribute	Description
Connector type	RJ45
Standards compliance	RS-232

Attribute	Description
Working mode	Duplex Universal Asynchronous Receiver/Transmitter (UART)
Baud rate	9600 bit/s, 19200 bit/s, 38400 bit/s, 57600 bit/s, or 115200 bit/s Default value: 9600 bit/s

ETH management port

You can connect a switch to a configuration terminal or network management workstation through the ETH management port to configure the switch locally or remotely. The port must use an **Ethernet cable**. You can choose to download the software package through the ETH management port in the BootLoad menu. File transfer through the ETH management port is faster than transfer through the console port. **Table 4-121** describes the attributes of an ETH management port.

Table 4-121 Attributes of an ETH management port

Attribute	Description
Connector type	RJ45
Standards compliance	IEEE802.3
Working mode	10/100 Mbit/s auto-sensing
Maximum transmission distance	100 m

In V200R012C00 and later versions, you can log in to the switch that contains the ETH management port for the first time through the ETH port. For details, see "First Login to a Switch" in the *Configuration Guide - Basic Configuration*. If you have logged in to the device for the first time by pressing and holding the MODE button for 6 seconds or longer and saved the configuration, the default configuration on the ETH port will be cleared. In this case, you cannot log in to the switch for the first time through the ETH port. You are advised to log in to the switch for the first time through the ETH port.

USB port

The USB port can have a USB flash drive connected to upgrade the switch, or transfer configuration files or other files. The USB port can only connect to a USB flash drive that complies with USB 2.0.

NOTE

USB flash drives from different vendors differ in model compatibility and drivers. If a USB flash drive cannot be used, try to replace it with another one from a mainstream vendor. Switches support a maximum of 128 GB USB flash drives.

Indicator Description

The S6720-56C-PWH-SI has the same types of indicators as the S6720-32C-PWH-SI-AC. For details, see **Indicator Description**.

Power Supply Configuration

The S6720-56C-PWH-SI is a PoE switch. It provides two power module slots, each supporting a 580 W, 650 W, 1150 W, or 1000 W (applicable in V200R013C00 and later versions) power module.

- A 580 W AC power module and a 650 W DC power module can be used together.
- A 1000 W AC power module and a 580 W AC power module can be used together.
- A 1000 W AC power module and a 1150 W AC power module can be used together.

Table 4-122 lists its power supply configurations.

Table 4-122 Power supply configurations

Power Module 1	Power Module 2	Available PoE Power	Maximum Number of Ports (Fully Loaded)
580 W or 650 W	–	369.6 W	• 802.3af (15.4 W per port): 24 • 802.3at (30 W per port): 12 • 802.3bt (60 W per port): 6
580 W or 650 W	580 W or 650 W	739.2 W	• 802.3af (15.4 W per port): 48 • 802.3at (30 W per port): 24 • 802.3bt (60 W per port): 12
1150 W (220 V)	–	785.4 W	• 802.3af (15.4 W per port): 48 • 802.3at (30 W per port): 26 • 802.3bt (60 W per port): 13

Power Module 1	Power Module 2	Available PoE Power	Maximum Number of Ports (Fully Loaded)
1150 W (220 V)	1150 W (220 V)	1440 W	• 802.3af (15.4 W per port): 48 • 802.3at (30 W per port): 48 • 802.3bt (60 W per port): 24
1150 W (110 V)	–	446.6 W	• 802.3af (15.4 W per port): 29 • 802.3at (30 W per port): 14 • 802.3bt (60 W per port): 7
1150 W (110 V)	1150 W (110 V)	893.2 W	• 802.3af (15.4 W per port): 48 • 802.3at (30 W per port): 29 • 802.3bt (60 W per port): 14
1000 W (220 V)	-	754.6 W	• 802.3af (15.4 W per port): 48 • 802.3at (30 W per port): 25 • 802.3bt (60 W per port): 12
1000 W (220 V)	1000 W (220 V)	1440 W	• 802.3af (15.4 W per port): 48 • 802.3at (30 W per port): 48 • 802.3bt (60 W per port): 24
1000 W (110 V)	-	754.6 W	• 802.3af (15.4 W per port): 48 • 802.3at (30 W per port): 25 • 802.3bt (60 W per port): 12

Power Module 1	Power Module 2	Available PoE Power	Maximum Number of Ports (Fully Loaded)
1000 W (110 V)	1000 W (110 V)	1440 W	• 802.3af (15.4 W per port): 48 • 802.3at (30 W per port): 48 • 802.3bt (60 W per port): 24
1000 W	580 W	739.2 W	• 802.3af (15.4 W per port): 48 • 802.3at (30 W per port): 24 • 802.3bt (60 W per port): 12
580 W	1000 W	739.2 W	• 802.3af (15.4 W per port): 48 • 802.3at (30 W per port): 24 • 802.3bt (60 W per port): 12
1000 W (220 V)	1150 W (220 V)	1440 W	• 802.3af (15.4 W per port): 48 • 802.3at (30 W per port): 48 • 802.3bt (60 W per port): 24
1150 W (220 V)	1000 W (220 V)	1440 W	• 802.3af (15.4 W per port): 48 • 802.3at (30 W per port): 48 • 802.3bt (60 W per port): 24
1000 W (110 V)	1150 W (110 V)	893.2 W	• 802.3af (15.4 W per port): 48 • 802.3at (30 W per port): 29 • 802.3bt (60 W per port): 14

Power Module 1	Power Module 2	Available PoE Power	Maximum Number of Ports (Fully Loaded)
1150 W (110 V)	1000 W (110 V)	893.2 W	• 802.3af (15.4 W per port): 48 • 802.3at (30 W per port): 29 • 802.3bt (60 W per port): 14

NOTE

When a switch has two power modules installed, the two power modules work in redundancy mode to provide power for the chassis and in load balancing mode to provide power for PDs.

Figure 4-50 shows the power supply mode of dual AC PoE power modules (PWR1 and PWR2). After AC power is transmitted to the PWR modules, the PWR modules provide 12 V and -53 V outputs. The outputs are combined on the motherboard, which then provides 12 V voltage for the switch and -53 V voltage for the PDs.

Figure 4-50 Power supply by dual AC PoE power modules

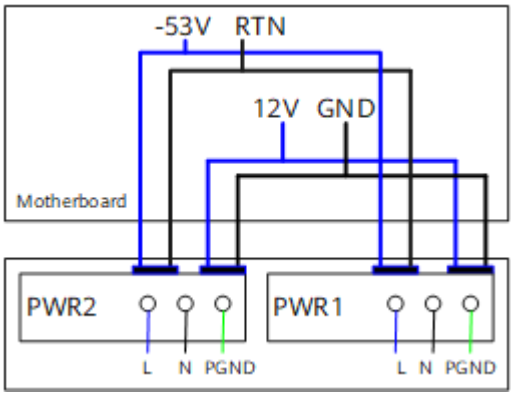

L: live wire N: neutral wire PGND: protection ground wire GND: 12 V reference ground RTN: -53 V reference ground

Figure 4-51 shows the power supply connections of dual DC PoE power modules. After DC power is transmitted to the PWR module, the PWR module provides 12 V and -53 V output voltages, and the motherboard provides 12 V voltage for the entire device and -53 V voltage for the PDs.

Figure 4-51 Power supply connections of dual DC PoE power modules

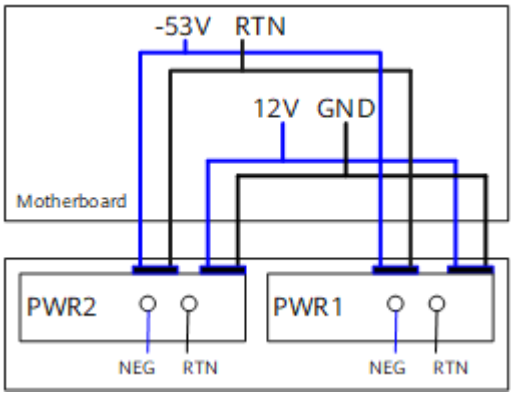

NEG: negative wire RTN: positive wire GND: 12 V reference ground RTN: -53 V reference ground

Heat Dissipation

The S6720-56C-PWH-SI uses pluggable fan modules for forced air cooling. Air flows in from the left, right, and front sides, and exhausts from the rear panel.

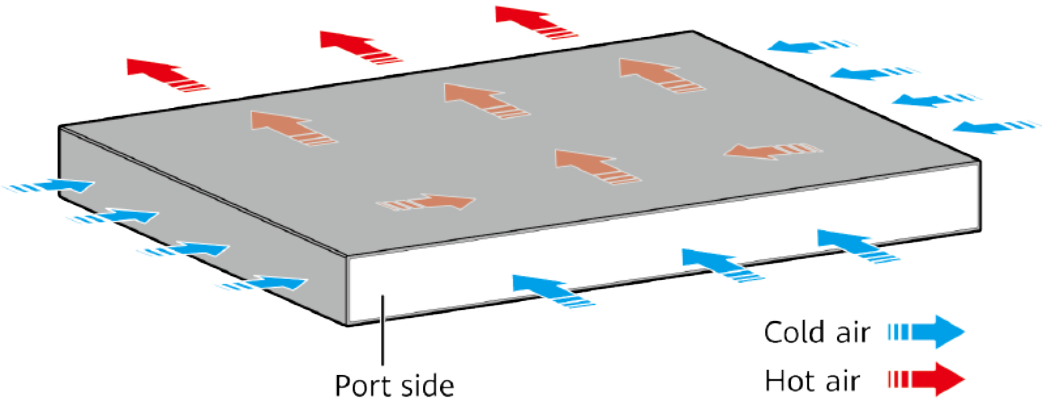

NOTE

This figure only shows the airflow direction and does not depict the actual device.

Technical Specifications

Table 4-123 lists technical specifications of the S6720-56C-PWH-SI.

Table 4-123 Technical specifications

Item	Description
Memory (RAM)	1 GB
Flash	512 MB in total. To view the available flash memory size, run the **display version** command.

Item	Description
Mean time between failures (MTBF)	23.9 years
Mean time to repair (MTTR)	2 hours
Availability	> 0.99999
Service port surge protection	Common mode: ±6 kV
Power supply surge protection	• Using 580 W AC or 1000 W AC power modules: ±6 kV in differential mode, ±6 kV in common mode • Using 650 W DC or 1150 W AC power modules: ±2 kV in differential mode, ±4 kV in common mode
Dimensions (H x W x D)	• Basic dimensions (excluding the parts protruding from the body): 44.4 mm x 442.0 mm x 425.0 mm (1.75 in. x 17.4 in. x 16.73 in.) • Maximum dimensions (the depth is the distance from ports on the front panel to the handle on the rear panel): 44.4 mm x 442.0 mm x 451.3 mm (1.75 in. x 17.4 in. x 17.77 in.) When 1150 W power modules are installed, they stretch out from the chassis. Therefore, the total depth of the switch changes to 541.1 mm (21.3 in.).
Weight (with packaging)	8.3 kg (18.3 lb)
Stack ports	Any MultiGE, 10GE SFP+, or 40GE QSFP+ ports (a maximum of 16 physical ports)
RTC	Supported
RPS	Not supported
PoE	Supported
Rated voltage range	100 V AC to 240 V AC, 50/60 Hz -48 V DC to -60 V DC
Maximum voltage range	90 V AC to 264 V AC, 47 Hz to 63 Hz -38.4 V DC to -72 V DC

Item	Description
Maximum power consumption (100% throughput, full speed of fans)	● Using 650 W DC power modules or 580 W AC power modules – Not providing the PoE function: 120.5 W (without card) – 100% PoE loads: 1068.1 W (system power consumption: 328.9 W, PoE: 739.2 W, without card) ● Using 1150 W AC or 1000 W AC power modules – Not providing the PoE function: 120.5 W (without card) – 100% PoE loads: 1995.4 W (system power consumption: 555.4 W, PoE: 1440 W, without card)
Typical power consumption (30% of traffic load, tested according to ATIS standard)	91.01 W (not providing the PoE function, without card)
Operating temperature	0°C to 45°C (32°F to 113°F) at an altitude of 0-1800 m (0-5906 ft.) **NOTE** When the altitude is 1800-5000 m (5906-16404 ft.), the highest operating temperature reduces by 1°C (1.8°F) every time the altitude increases by 220 m (722 ft.).
Short-term operating temperature	-5°C to +50°C (23°F to 122°F) at an altitude of 0-1800 m (0-5906 ft.) **NOTE** When the altitude is 1800-5000 m (5906-16404 ft.), the highest operating temperature reduces by 1°C (1.8°F) every time the altitude increases by 220 m (722 ft.). The equipment can operate beyond the normal operating temperature range for a short-term period, but the following conditions must be met: ● The equipment operates at a temperature of over 45°C (113°F) consecutively for at most 96 hours in one year. ● The equipment operates at a temperature of over 45°C (113°F) for a total of no more than 360 hours in one year. ● The equipment operates at a temperature of over 45°C (113°F) for no more in 15 times in one year. The equipment may be damaged or experience unexpected exceptions if any of the preceding limits is exceeded. The equipment cannot start when the temperature is lower than 0°C (32°F). The maximum distance of optical modules used in these conditions cannot exceed 10 km.
Storage temperature	-40°C to +70°C (-40°F to +158°F)

Item	Description
Noise under normal temperature (27°C, sound power)	< 62.1 dB(A)
Relative humidity	5% to 95%, noncondensing
Operating altitude	0-5000 m (0-16404 ft.)
Certification	• EMC certification • Safety certification • Manufacturing certification
Part number	98010730

4.8 S6720S-SI

4.8.1 S6720S-26Q-SI-24S-AC

Version Mapping

Table 4-124 lists the mapping between the S6720S-26Q-SI-24S-AC chassis and software versions.

Table 4-124 Version mapping

Series	Model	Software Version
S6720S-SI	S6720S-26Q-SI-24S-AC	V200R011C00 to V200R019C10 versions

Appearance and Structure

Figure 4-52 S6720S-26Q-SI-24S-AC appearance

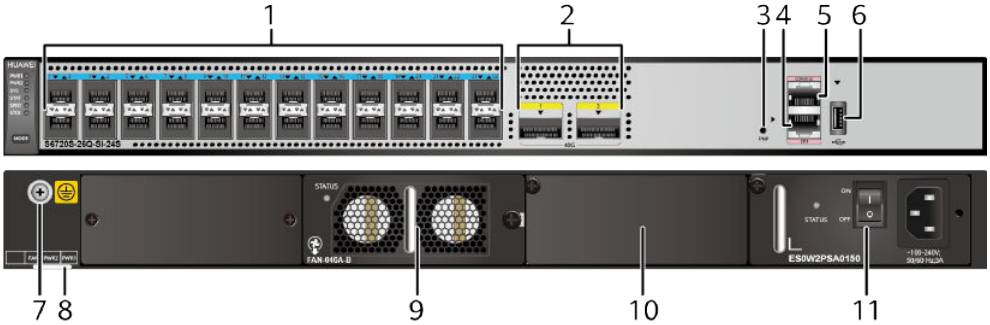

1	Twenty-four 10GE SFP+ ports Applicable modules and cables: • **GE optical module** • **GE-CWDM optical module** • **GE-DWDM optical module** • **GE copper module (100M/1000M auto-sensing)** • **10GE SFP+ optical module (OSXD22N00 not supported)** • **10GE-CWDM optical module** • **10GE-DWDM optical module** • **1 m, 3 m, 5 m, and 10 m SFP+ high-speed copper cables** • **3 m and 10 m SFP+ AOC cables** • **0.5 m and 1.5 m SFP+ dedicated stack copper cables (the last 16 ports are supported, used for zero-configuration stacking, supported in V200R011C10 and later versions)**	2	Two 40GE QSFP+ ports Applicable modules and cables: • **QSFP+ optical module** • **1 m, 3 m, and 5 m QSFP+ to QSFP+ high-speed copper cables** • **1 m, 3 m, and 5 m QSFP+ to 4*SFP+ high-speed copper cables** • **10 m QSFP+ to QSFP+ AOC cable** • **10 m QSFP+ to 4*SFP+ AOC cable** **NOTE** A 40GE QSFP+ optical port can be split into four 10GE ports.
3	One PNP button **NOTICE** Applicable in V200R012C00 and later versions: To restore the factory settings and reset the switch, hold down the button for at least 6 seconds. To reset the switch, press the button. Resetting the switch will cause service interruption. Exercise caution when you press the PNP button.	4	One ETH management port
5	One console port	6	One USB port
7	Ground screw **NOTE** It is used with a **ground cable**.	8	ESN label **NOTE** You can draw it out to view the ESN and MAC address of the switch.

9	Fan slot **NOTE** Applicable fan module: **6.3 FAN-046A-B Fan Module**	10	Power module slot 2 **NOTE** Applicable power modules: • **150 W AC power module** • **150 W DC power module**
11	Power module slot 1 **NOTE** Applicable power modules: • **150 W AC power module** • **150 W DC power module**	-	-

Port Description

10GE SFP+ port

A 10GE SFP+ Ethernet optical port supports auto-sensing to 1000 Mbit/s. It sends and receives service data at 1000 Mbit/s or 10 Gbit/s. **Table 4-125** describes the attributes of a 10GE SFP+ Ethernet optical port.

Table 4-125 Attributes of a 10GE SFP+ port

Attribute	Description
Connector type	LC/PC
Optical port attributes	Depend on the optical module used
Standards compliance	IEEE802.3ae
Working mode	GE/10GE auto-sensing

40GE QSFP+ port

A 40GE QSFP+ optical port sends and receives service traffic at 40 Gbit/s and can be split into four 10GE ports. After a split, the 40GE QSFP+ optical port needs to be connected to a remote device using a 1-to-4 QSFP+ fiber (with matching optical modules), a 1-to-4 QSFP+ AOC cable, or a 1-to-4 QSFP+ copper cable. **Table 4-126** describes the attributes of a 40GE QSFP+ optical port.

Table 4-126 Attributes of a 40GE QSFP+ optical port

Attribute	Description
Connector type	MPO/LC

Attribute	Description
Optical port attributes	Depend on the optical module used
Standards compliance	IEEE802.3ba

Console port

The console port is connected to a console for on-site configuration. The port must use a **console cable**. The console port is used when a switch is powered on for the first time. For details about the attributes of a console port, see **Table 4-127**.

Table 4-127 Attributes of a console port

Attribute	Description
Connector type	RJ45
Standards compliance	RS-232
Working mode	Duplex Universal Asynchronous Receiver/Transmitter (UART)
Baud rate	9600 bit/s, 19200 bit/s, 38400 bit/s, 57600 bit/s, or 115200 bit/s Default value: 9600 bit/s

ETH management port

You can connect a switch to a configuration terminal or network management workstation through the ETH management port to configure the switch locally or remotely. The port must use an **Ethernet cable**. You can choose to download the software package through the ETH management port in the BootLoad menu. File transfer through the ETH management port is faster than transfer through the console port. **Table 4-128** describes the attributes of an ETH management port.

Table 4-128 Attributes of an ETH management port

Attribute	Description
Connector type	RJ45
Standards compliance	IEEE802.3
Working mode	10/100 Mbit/s auto-sensing

Attribute	Description
Maximum transmission distance	100 m

In V200R012C00 and later versions, you can log in to the switch that contains the ETH management port for the first time through the ETH port. For details, see "First Login to a Switch" in the *Configuration Guide - Basic Configuration*. If you have logged in to the device for the first time by pressing and holding the MODE button for 6 seconds or longer and saved the configuration, the default configuration on the ETH port will be cleared. In this case, you cannot log in to the switch for the first time through the ETH port. You are advised to log in to the switch for the first time through the ETH port.

USB port

The USB port can have a USB flash drive connected to upgrade the switch, or transfer configuration files or other files. The USB port can only connect to a USB flash drive that complies with USB 2.0.

NOTE

USB flash drives from different vendors differ in model compatibility and drivers. If a USB flash drive cannot be used, try to replace it with another one from a mainstream vendor. Switches support a maximum of 128 GB USB flash drives.

Indicator Description

The S6720S-26Q-SI-24S-AC has the same types of indicators as the S6720-26Q-SI-24S-AC. For details, see **Indicator Description**.

Power Supply Configuration

The S6720S-26Q-SI-24S-AC uses pluggable power modules. It can be configured with a single power module or double power modules for 1+1 power redundancy. Pluggable AC and DC power modules can be used together in the same switch.

Figure 4-53 shows the power supply connections of dual DC power modules. After DC power is transmitted to the PWR module, the PWR module provides 12 V output voltage, and the motherboard provides power for the entire device.

Figure 4-53 Power supply connections of dual DC power modules

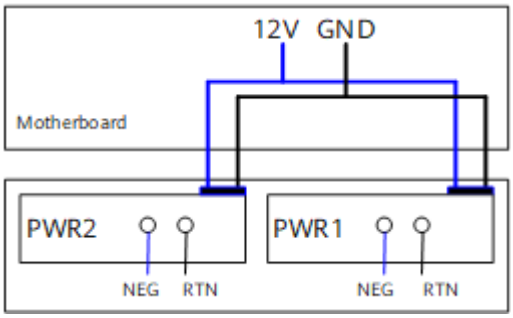

NEG: negative wire RTN: positive wire GND: 12 V reference ground

Figure 4-54 shows the power supply connections of dual AC power modules. After AC power is transmitted to the PWR module, the PWR module provides 12 V output voltage, and the motherboard provides power for the entire device.

Figure 4-54 Power supply connections of dual AC power modules

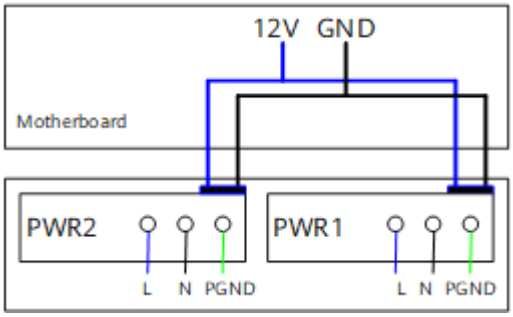

L: Live wire N: Neutral wire PGND: Protection ground wire GND: 12 V reference ground

Heat Dissipation

The S6720S-26Q-SI-24S-AC uses a pluggable fan module for forced air cooling. Air flows in from the left, right, and front sides, and exhausts from the rear panel.

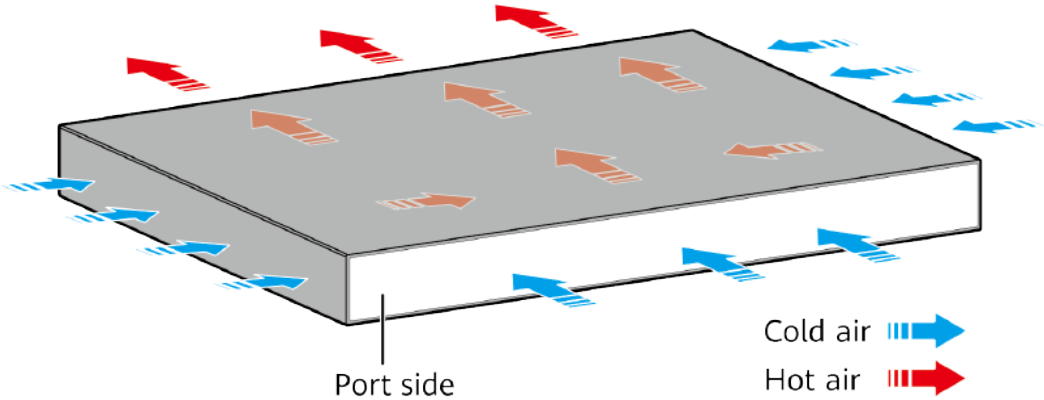

NOTE

This figure only shows the airflow direction and does not depict the actual device.

Technical Specifications

Table 4-129 lists specifications of the S6720S-26Q-SI-24S-AC.

Table 4-129 Technical specifications

Item	Description
Memory (RAM)	1 GB
Flash	512 MB in total. To view the available flash memory size, run the **display version** command.
Mean time between failures (MTBF)	41.9 years
Mean time to repair (MTTR)	2 hours
Availability	> 0.99999
Service port surge protection	NA
Power supply surge protection	• Using AC power modules: ±6 kV in differential mode, ±6 kV in common mode • Using DC power modules: ±1 kV in differential mode, ±2 kV in common mode
Dimensions (H x W x D)	• Basic dimensions (excluding the parts protruding from the body): 44.4 mm x 442.0 mm x 425.0 mm (1.75 in. x 17.4 in. x 16.73 in.) • Maximum dimensions (the depth is the distance from ports on the front panel to the handle on the rear panel): 44.4 mm x 442.0 mm x 451.3 mm (1.75 in. x 17.4 in. x 17.77 in.)
Weight (including package)	8.9 kg (19.62 lb)
Stack ports	• Any 10GE SFP+ ports (a maximum of 16 physical ports) • Any 40GE QSFP+ ports (a maximum of 2 physical ports)
RTC	Supported
RPS	Not supported
PoE	Not supported

Item	Description
Rated voltage range	100 V AC to 240 V AC, 50/60 Hz -48 V DC to -60 V DC
Maximum voltage range	90 V AC to 264 V AC, 47 Hz to 63 Hz -36 V DC to -72 V DC
Maximum power consumption (100% throughput, full speed of fans)	97 W
Typical power consumption (30% of traffic load, tested according to ATIS standard)	68.4 W
Operating temperature	0°C to 45°C (32°F to 113°F) at an altitude of 0-1800 m (0-5906 ft.) **NOTE** When the altitude is 1800-5000 m (5906-16404 ft.), the highest operating temperature reduces by 1°C (1.8°F) every time the altitude increases by 220 m (722 ft.).
Short-term operating temperature	-5°C to +50°C (23°F to 122°F) at an altitude of 0-1800 m (0-5906 ft.) **NOTE** When the altitude is 1800-5000 m (5906-16404 ft.), the highest operating temperature reduces by 1°C (1.8°F) every time the altitude increases by 220 m (722 ft.). The equipment can operate beyond the normal operating temperature range for a short-term period, but the following conditions must be met: ● The equipment operates at a temperature of over 45°C (113°F) consecutively for at most 96 hours in one year. ● The equipment operates at a temperature of over 45°C (113°F) for a total of no more than 360 hours in one year. ● The equipment operates at a temperature of over 45°C (113°F) for no more in 15 times in one year. The equipment may be damaged or experience unexpected exceptions if any of the preceding limits is exceeded. The equipment cannot start when the temperature is lower than 0°C (32°F). The maximum distance of optical modules used in these conditions cannot exceed 10 km.
Storage temperature	-40°C to +70°C (-40°F to +158°F)

Item	Description
Noise under normal temperature (27°C, sound power)	< 57 dB(A)
Relative humidity	5% to 95%, noncondensing
Operating altitude	• AC power modules configured: 0-5000 m (0-16404 ft.) • DC power modules configured: 0-2000 m (0-6562 ft.)
Certification	• EMC certification • Safety certification • Manufacturing certification
Part number	98010691

4.9 S6720-EI

4.9.1 S6720-30C-EI-24S-AC

Version Mapping

Table 4-130 lists the mapping between the S6720-30C-EI-24S-AC chassis and software versions.

Table 4-130 Version mapping

Series	Model	Software Version
S6720-EI	S6720-30C-EI-24S-AC	V200R008C00 and later versions **NOTE** V200R021C01 is not supported.

Appearance and Structure

Figure 4-55 S6720-30C-EI-24S-AC appearance

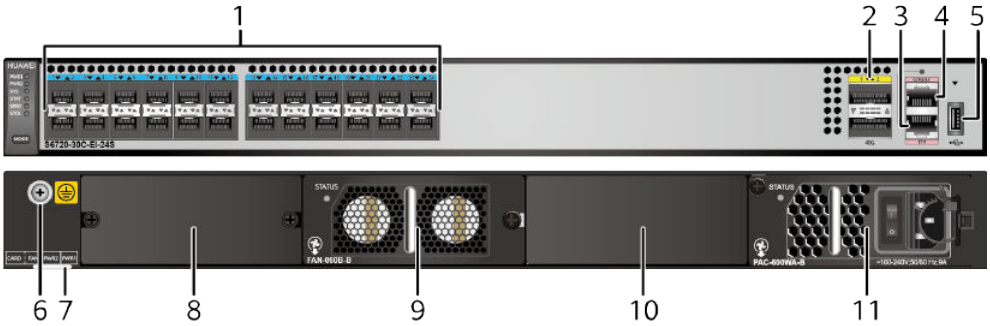

1	Twenty-four 10GE SFP+ ports Applicable modules and cables: • **GE optical module** • **GE-CWDM optical module** • **GE-DWDM optical module** • **GE copper module** (100M/1000M auto-sensing supported in V200R009 and later versions) • **10GE SFP+ optical module** (OSXD22N00 not supported) • **10GE-CWDM optical module** • **10GE-DWDM optical module** (applicable in V200R009C00 and later versions) • **1 m, 3 m, 5 m, and 10 m SFP+ high-speed copper cables** • **3 m and 10 m SFP+ AOC cables** • **0.5 m and 1.5 m SFP+ dedicated stack copper cables** (the last 16 ports are supported, used for zero-configuration stacking, supported in V200R011C10 and later versions)	2	Two 40GE QSFP+ ports Applicable modules and cables: • **QSFP+ optical module** • **1 m, 3 m, and 5 m QSFP+ to QSFP+ high-speed copper cables** • **1 m, 3 m, and 5 m QSFP+ to 4*SFP+ high-speed copper cables** • **10 m QSFP+ to QSFP+ AOC cable** (applicable in V200R009C00 and later versions) • **10 m QSFP+ to 4*SFP+ AOC cable** (applicable in V200R009C00 and later versions) **NOTE** A 40GE QSFP+ optical port can be split into four 10GE ports.
3	One ETH management port	4	One console port
5	One USB port	6	Ground screw **NOTE** It is used with a **ground cable**.

7	ESN label **NOTE** You can draw it out to view the ESN and MAC address of the switch.	8	Rear card slot **NOTE** Card supported: • **ES5D21Q04Q01** • **ES5D21X08S00** (applicable in V200R012C00 and later versions) • **ES5D21X04S01** (applicable in V200R019C00 and later versions)
9	Fan slot **NOTE** Applicable fan module: **6.5 FAN-060B-B (Fan box (B, FAN panel side exhaust))**	10	Power module slot 2 **NOTE** Applicable power modules: • **5.13 PDC-350WA-B (350 W DC Power Module)** • **5.14 PAC-600WA-B (600 W AC Power Module)** • **5.15 PAC-600WD-B (600 W AC Power Module)** (applicable in V200R020C10 and later versions)
11	Power module slot 1 **NOTE** Applicable power modules: • **5.13 PDC-350WA-B (350 W DC Power Module)** • **5.14 PAC-600WA-B (600 W AC Power Module)** • **5.15 PAC-600WD-B (600 W AC Power Module)** (applicable in V200R020C10 and later versions)	-	-

Port Description

10GE SFP+ port

A 10GE SFP+ Ethernet optical port supports auto-sensing to 1000 Mbit/s. It sends and receives service data at 1000 Mbit/s or 10 Gbit/s. **Table 4-131** describes the attributes of a 10GE SFP+ Ethernet optical port.

Table 4-131 Attributes of a 10GE SFP+ port

Attribute	Description
Connector type	LC/PC
Optical port attributes	Depend on the optical module used
Standards compliance	IEEE802.3ae

Attribute	Description
Working mode	GE/10GE auto-sensing

40GE QSFP+ port

A 40GE QSFP+ optical port sends and receives service traffic at 40 Gbit/s and can be split into four 10GE ports. After a split, the 40GE QSFP+ optical port needs to be connected to a remote device using a 1-to-4 QSFP+ fiber (with matching optical modules), a 1-to-4 QSFP+ AOC cable, or a 1-to-4 QSFP+ copper cable. **Table 4-132** describes the attributes of a 40GE QSFP+ optical port.

Table 4-132 Attributes of a 40GE QSFP+ optical port

Attribute	Description
Connector type	MPO/LC
Optical port attributes	Depend on the optical module used
Standards compliance	IEEE802.3ba

Console port

The console port is connected to a console for on-site configuration. The port must use a **console cable**. The console port is used when a switch is powered on for the first time. For details about the attributes of a console port, see **Table 4-133**.

Table 4-133 Attributes of a console port

Attribute	Description
Connector type	RJ45
Standards compliance	RS-232
Working mode	Duplex Universal Asynchronous Receiver/Transmitter (UART)
Baud rate	9600 bit/s, 19200 bit/s, 38400 bit/s, 57600 bit/s, or 115200 bit/s Default value: 9600 bit/s

ETH management port

You can connect a switch to a configuration terminal or network management workstation through the ETH management port to configure the switch locally or

remotely. The port must use an **Ethernet cable**. You can choose to download the software package through the ETH management port in the BootLoad menu. File transfer through the ETH management port is faster than transfer through the console port. **Table 4-134** describes the attributes of an ETH management port.

Table 4-134 Attributes of an ETH management port

Attribute	Description
Connector type	RJ45
Standards compliance	IEEE802.3
Working mode	10/100 Mbit/s auto-sensing
Maximum transmission distance	100 m

In V200R012C00 and later versions, you can log in to the switch that contains the ETH management port for the first time through the ETH port. For details, see "First Login to a Switch" in the *Configuration Guide - Basic Configuration*. If you have logged in to the device for the first time by pressing and holding the MODE button for 6 seconds or longer and saved the configuration, the default configuration on the ETH port will be cleared. In this case, you cannot log in to the switch for the first time through the ETH port. You are advised to log in to the switch for the first time through the ETH port.

USB port

The USB port can have a USB flash drive connected to upgrade the switch, or transfer configuration files or other files. The USB port can only connect to a USB flash drive that complies with USB 2.0.

NOTE

USB flash drives from different vendors differ in model compatibility and drivers. If a USB flash drive cannot be used, try to replace it with another one from a mainstream vendor. Switches support a maximum of 128 GB USB flash drives.

Indicator Description

NOTE

Hold down the mode switch button for 6s and release it to start the web initial login mode. Either of the following situations will occur:

- If the switch has no configuration file, the system attempts to enter the web initial login mode. In this mode, the status of mode indicators is as follows:
  - If the system enters the web initial login mode successfully, all mode indicators turn green and stay on for a maximum of 10 minutes.
  - If the system fails to enter the initial login mode, all mode indicators fast blink for 10 seconds and then restore the default status.
- If the switch has a configuration file, the system cannot enter the web initial login mode. In this case, all mode indicators fast blink for 10s, and then return to the default states.

Figure 4-56 Indicators on the S6720-30C-EI-24S-AC

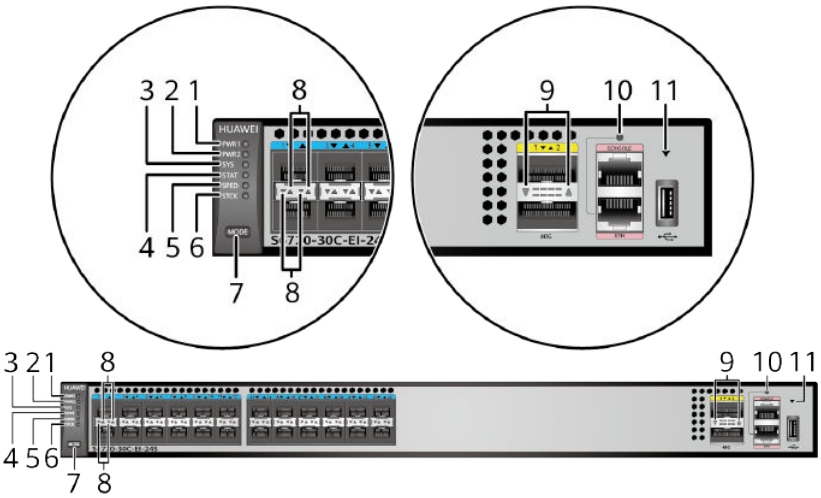

NOTE

The S6720-EI series switches provide a command for setting fault indicators, which help field maintenance personnel find a faulty switch quickly.

The SYS indicator and mode indicators (STAT, SPED, and STCK) are used as fault indicators. When an S6720-EI switch is faulty, you can run the command to turn on the fault indicators. Then the SYS indicator and mode indicators fast blink red to help field maintenance personnel quickly find the faulty switch.

Table 4-135 Description of indicators on the switch

No.	Indicator	Name	Color	Status	Description
1	PWR 1	Power module indicator	-	Off	No power module is available in power module slot 1, or the switch has only one power module but the power module does not work normally.

No.	Indicator	Name	Color	Status	Description
			Green	Steady on	A power module is installed in power module slot 1 and is working normally.
			Yellow	Steady on	The switch has two power modules installed. Any of the following situations occurs in power module slot 1: ● A power module is available in this slot but its power switch is in the OFF position. ● A power module is available in this slot but it is not connected to a power source. ● The power module in this slot has failed.
2	PWR 2	Power module indicator	-	Off	No power module is available in power module slot 2, or the switch has only one power module but the power module does not work normally.
			Green	Steady on	A power module is installed in power module slot 2 and is working normally.
			Yellow	Steady on	The switch has two power modules installed. Any of the following situations occurs in power module slot 2: ● A power module is available in this slot but its power switch is in the OFF position. ● A power module is available in this slot but it is not connected to a power source. ● The power module in this slot has failed.
3	SYS	System status indicator	-	Off	The system is not running.
			Green	Fast blinking	The system is starting.
			Green	Slow blinking	The system is running normally.
			Red	Steady on	The system does not work normally after registration, or a fan alarm or temperature alarm has been generated.

No.	Indicator	Name	Color	Status	Description
4	STAT	Status indicator	-	Off	The status mode is not selected.
			Green	Steady on	The status mode (default mode) is selected. If the status mode is selected, the service port indicator shows the port link or activity state.
5	SPED	Speed indicator	-	Off	The speed mode is not selected.
			Green	Steady on	The service port indicators show the port speeds. After 45 seconds, the service port indicators automatically restore to the status mode.
6	STCK	Stack indicator	-	Off	● If you are not changing the indicator mode (default): The switch is in stack standby or slave state or the stacking function is not enabled on the switch. ● If you are changing the indicator mode: The stack mode is not selected.
			Green	Steady on	The switch is a standby or slave switch in a stack, and the service port indicators show the stack ID of the switch.
			Green	Blinking	● If you are not changing the indicator mode (default): The switch is a stack master switch or a standalone switch with the stacking function enabled. ● If you are changing the indicator mode: The switch is the master switch in a stack or a standalone switch, and the service port indicators show the stack ID of the master switch. After 45 seconds, the service port indicators automatically restore to the status mode.

No.	Indicator	Name	Color	Status	Description
7	MODE	Mode switch button	-	-	• When you press this button once, the service port indicators change to the speed mode and show the speed of each service port. • When you press this button a second time, the service port indicators change to the stack mode and show the stack ID of the local switch. • When you press this button a third time, the service port indicators restore to the default mode, and the STAT indicator turns green. If you do not press the MODE button within 45 seconds, the service port indicators restore to the default mode. In this case, the STAT indicator is steady green, the SPED indicator is off, and the STCK indicator is off or blinking green.
8	-	10GE service port indicator (two indicators for each port)	Meanings of service port indicators vary in different modes. For details, see **Table 4-136**.		
9	-	40GE service port indicator (one indicator for each port)	Meanings of service port indicators vary in different modes. For details, see **Table 4-137**.		
10	-	ETH port indicator	-	Off	The ETH port is not connected.
			Green	Steady on	The ETH port is connected.
			Green	Blinking	The ETH port is sending or receiving data.

No.	Indicator	Name	Color	Status	Description
11	-	USB-based deployment indicator	-	Off	● No USB flash drive is connected to the switch. ● The USB port is damaged. ● The indicator is damaged. ● The USB flash drive does not have any configuration file and cannot be used for deployment. ● The switch has been upgraded using the USB flash drive and is restarting.
			Green	Steady on	A USB-based deployment has been completed.
			Green	Blinking	The system is reading data from the USB flash drive.
			Yellow	Steady on	The switch has copied all the required files and completed the file check. The USB flash drive can be removed from the switch.
			Red	Blinking	An error has occurred when the system is executing the configuration file or reading data from the USB flash drive.

Table 4-136 Description of 10GE service port indicators in different modes (two indicators for each port)

Display Mode	Color	Status	Description
Status	-	Off	The port is not connected or has been shut down.
	Green	Steady on	A link has been established on the port.
	Yellow	Blinking	The port is sending or receiving data.
Speed	-	Off	The port is not connected or has been shut down.
	Green and yellow	Steady on	1000M/10GE port: The port is operating at 1000 Mbit/s.

Display Mode	Color	Status	Description
	Green and yellow	Blinking	1000M/10GE port: The port is operating at 10 Gbit/s.
Stack	-	Off	Port indicators do not show the stack ID of the switch.
	Green and yellow	Steady on	The switch is not the master switch in a stack. ● If the indicator of a port is steady on, the number of this port is the stack ID of the switch. ● If the indicators of ports 1 to 9 are steady on, the stack ID of the switch is 0.
	Green and yellow	Blinking	The switch is the master switch in a stack. ● If the indicator of a port is blinking, the number of this port is the stack ID of the switch. ● If the indicators of ports 1 to 9 are blinking, the stack ID of the switch is 0.

Table 4-137 Description of 40GE service port indicators in different modes (one indicator for each port)

Display Mode	Color	Status	Description
Status	-	Off	The port is not connected or has been shut down.
	Green	Steady on	A link has been established on the port.
	Green	Blinking	The port is sending or receiving data.
Speed	-	Off	The port is not connected or has been shut down.
	Green	Steady on	The port is operating at 10 Gbit/s.
	Green	Blinking	The port is operating at 40 Gbit/s.

Power Supply Configuration

The S6720-30C-EI-24S-AC can be configured with a single power module or double power modules for 1+1 power redundancy. AC and DC power modules can be used together in the same switch.

Figure 4-57 shows the power supply connections of dual DC power modules. After DC power is transmitted to the PWR module, the PWR module provides 12 V output voltage, and the motherboard provides power for the entire device.

Figure 4-57 Power supply connections of dual DC power modules

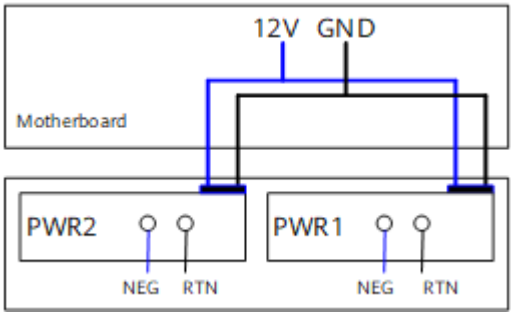

NEG: negative wire RTN: positive wire GND: 12 V reference ground

Figure 4-58 shows the power supply connections of dual AC power modules. After AC power is transmitted to the PWR module, the PWR module provides 12 V output voltage, and the motherboard provides power for the entire device.

Figure 4-58 Power supply connections of dual AC power modules

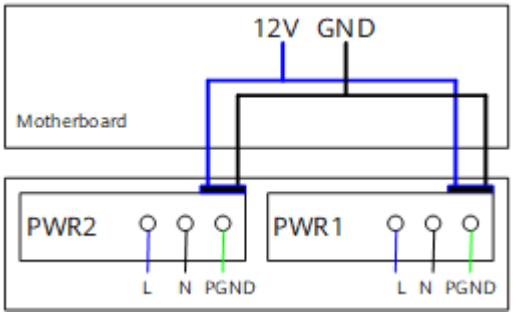

L: Live wire N: Neutral wire PGND: Protection ground wire GND: 12 V reference ground

Heat Dissipation

The S6720-30C-EI-24S-AC uses pluggable fan modules for forced air cooling. Air flows in from the left side, right side, and front panel, and exhausts from the rear panel.

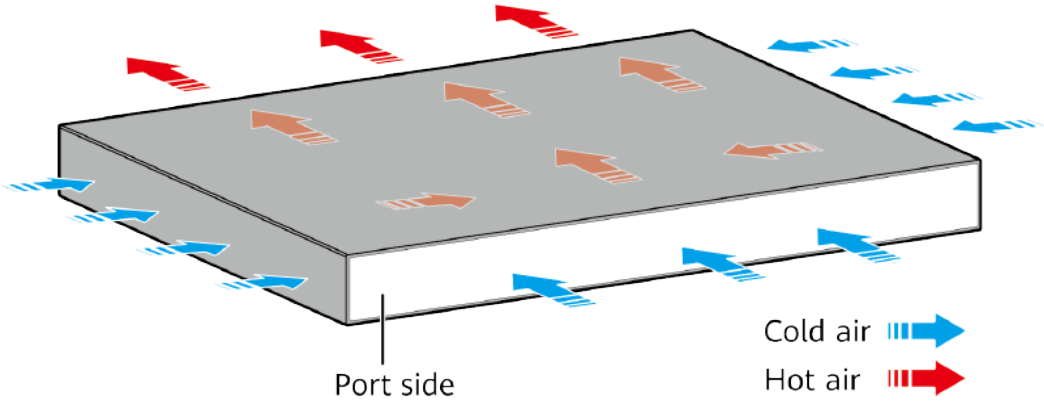

NOTE

This figure only shows the airflow direction and does not depict the actual device.

Technical Specifications

Table 4-138 lists technical specifications of the S6720-30C-EI-24S-AC.

Table 4-138 Technical specifications

Item	Description
Memory (RAM)	2 GB
Flash	512 MB in total. To view the available flash memory size, run the **display version** command.
Mean time between failures (MTBF)	80.60 years (without card)
Mean time to repair (MTTR)	2 hours
Availability	> 0.99999
Service port surge protection	NA
Power supply surge protection	• Using AC power modules: ±6 kV in differential mode, ±6 kV in common mode • Using DC power modules: ±1 kV in differential mode, ±2 kV in common mode
Dimensions (H x W x D)	• Basic dimensions (excluding the parts protruding from the body): 44.4 mm x 442.0 mm x 424.7 mm (1.75 in. x 17.4 in. x 16.72 in.) • Maximum dimensions (the depth is the distance from ports on the front panel to the handle on the rear panel): 44.4 mm x 442.0 mm x 451.8 mm (1.75 in. x 17.4 in. x 17.79 in.)

Item	Description
Weight (with packaging)	9.8 kg (21.61 lb)
Stack ports	● Any 10GE SFP+ ports (a maximum of 16 physical ports) ● Any 40GE QSFP+ ports (a maximum of 6 physical ports)
RTC	Supported
RPS	Not supported
PoE	Not supported
Rated voltage range	100 V AC to 240 V AC, 50/60 Hz -48 V DC to -60 V DC
Maximum voltage range	90 V AC to 264 V AC, 47 Hz to 63 Hz -38.4 V DC to -72 V DC
Maximum power consumption (100% throughput, full speed of fans)	233.7 W
Typical power consumption (30% of traffic load, tested according to ATIS standard)	147 W (without card)
Operating temperature	0°C to 45°C (32°F to 113°F) at an altitude of 0-1800 m (0-5906 ft.) **NOTE** When the altitude is 1800-5000 m (5906-16404 ft.), the highest operating temperature reduces by 1°C (1.8°F) every time the altitude increases by 220 m (722 ft.).
Storage temperature	-40°C to +70°C (-40°F to +158°F)
Noise under normal temperature (27°C, sound power)	< 72.1 dB(A)
Relative humidity	5% to 95%, noncondensing
Operating altitude	0-5000 m (0-16404 ft.)

Item	Description
Certification	• EMC certification • Safety certification • Manufacturing certification
Part number	02350DMN

4.9.2 S6720-30C-EI-24S-DC

Version Mapping

Table 4-139 lists the mapping between the S6720-30C-EI-24S-DC chassis and software versions.

Table 4-139 Version mapping

Series	Model	Software Version
S6720-EI	S6720-30C-EI-24S-DC	V200R009C00 and later versions **NOTE** V200R021C01 is not supported.

Appearance and Structure

Figure 4-59 S6720-30C-EI-24S-DC appearance

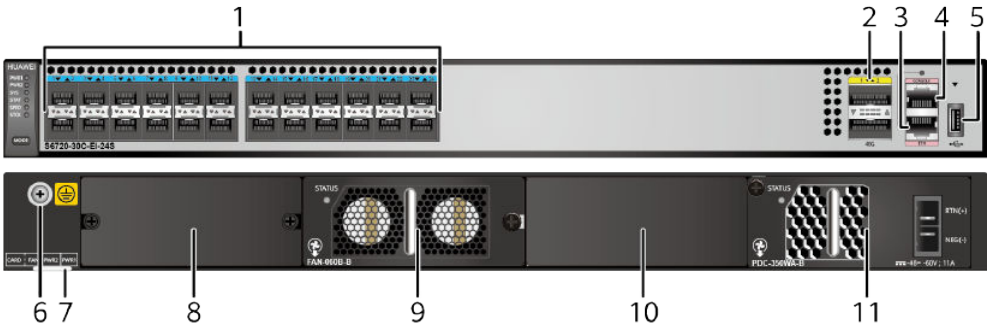

1	Twenty-four 10GE SFP+ ports Applicable modules and cables: • **GE optical module** • **GE-CWDM optical module** • **GE-DWDM optical module** • **GE copper module** (100M/1000M auto-sensing supported in V200R009 and later versions) • **10GE SFP+ optical module** (OSXD22N00 not supported) • **10GE-CWDM optical module** • **10GE-DWDM optical module** (applicable in V200R009C00 and later versions) • **1 m, 3 m, 5 m, and 10 m SFP+ high-speed copper cables** • **3 m and 10 m SFP+ AOC cables** • **0.5 m and 1.5 m SFP+ dedicated stack copper cables** (the last 16 ports are supported, used for zero-configuration stacking, supported in V200R011C10 and later versions)	2	Two 40GE QSFP+ ports Applicable modules and cables: • **QSFP+ optical module** • **1 m, 3 m, and 5 m QSFP+ to QSFP+ high-speed copper cables** • **1 m, 3 m, and 5 m QSFP+ to 4*SFP+ high-speed copper cables** • **10 m QSFP+ to QSFP+ AOC cable** (applicable in V200R009C00 and later versions) • **10 m QSFP+ to 4*SFP+ AOC cable** (applicable in V200R009C00 and later versions) **NOTE** A 40GE QSFP+ optical port can be split into four 10GE ports.
3	One ETH management port	4	One console port
5	One USB port	6	Ground screw **NOTE** It is used with a **ground cable**.
7	ESN label **NOTE** You can draw it out to view the ESN and MAC address of the switch.	8	Rear card slot **NOTE** Card supported: • **ES5D21Q04Q01** • **ES5D21X08S00** (applicable in V200R012C00 and later versions) • **ES5D21X04S01** (applicable in V200R019C00 and later versions)

9	Fan slot **NOTE** Applicable fan module: **6.5 FAN-060B-B (Fan box (B, FAN panel side exhaust))**	10	Power module slot 2 **NOTE** Applicable power modules: • **5.13 PDC-350WA-B (350 W DC Power Module)** • **5.14 PAC-600WA-B (600 W AC Power Module)** • **5.15 PAC-600WD-B (600 W AC Power Module)** (applicable in V200R020C10 and later versions)
11	Power module slot 1 **NOTE** Applicable power modules: • **5.13 PDC-350WA-B (350 W DC Power Module)** • **5.14 PAC-600WA-B (600 W AC Power Module)** • **5.15 PAC-600WD-B (600 W AC Power Module)** (applicable in V200R020C10 and later versions)	-	-

Port Description

10GE SFP+ port

A 10GE SFP+ Ethernet optical port supports auto-sensing to 1000 Mbit/s. It sends and receives service data at 1000 Mbit/s or 10 Gbit/s. **Table 4-140** describes the attributes of a 10GE SFP+ Ethernet optical port.

Table 4-140 Attributes of a 10GE SFP+ port

Attribute	Description
Connector type	LC/PC
Optical port attributes	Depend on the optical module used
Standards compliance	IEEE802.3ae
Working mode	GE/10GE auto-sensing

40GE QSFP+ port

A 40GE QSFP+ optical port sends and receives service traffic at 40 Gbit/s and can be split into four 10GE ports. After a split, the 40GE QSFP+ optical port needs to be connected to a remote device using a 1-to-4 QSFP+ fiber (with matching optical modules), a 1-to-4 QSFP+ AOC cable, or a 1-to-4 QSFP+ copper cable. **Table 4-141** describes the attributes of a 40GE QSFP+ optical port.

Table 4-141 Attributes of a 40GE QSFP+ optical port

Attribute	Description
Connector type	MPO/LC
Optical port attributes	Depend on the optical module used
Standards compliance	IEEE802.3ba

Console port

The console port is connected to a console for on-site configuration. The port must use a **console cable**. The console port is used when a switch is powered on for the first time. For details about the attributes of a console port, see **Table 4-142**.

Table 4-142 Attributes of a console port

Attribute	Description
Connector type	RJ45
Standards compliance	RS-232
Working mode	Duplex Universal Asynchronous Receiver/Transmitter (UART)
Baud rate	9600 bit/s, 19200 bit/s, 38400 bit/s, 57600 bit/s, or 115200 bit/s Default value: 9600 bit/s

ETH management port

You can connect a switch to a configuration terminal or network management workstation through the ETH management port to configure the switch locally or remotely. The port must use an **Ethernet cable**. You can choose to download the software package through the ETH management port in the BootLoad menu. File transfer through the ETH management port is faster than transfer through the console port. **Table 4-143** describes the attributes of an ETH management port.

Table 4-143 Attributes of an ETH management port

Attribute	Description
Connector type	RJ45
Standards compliance	IEEE802.3

Attribute	Description
Working mode	10/100 Mbit/s auto-sensing
Maximum transmission distance	100 m

In V200R012C00 and later versions, you can log in to the switch that contains the ETH management port for the first time through the ETH port. For details, see "First Login to a Switch" in the *Configuration Guide - Basic Configuration*. If you have logged in to the device for the first time by pressing and holding the MODE button for 6 seconds or longer and saved the configuration, the default configuration on the ETH port will be cleared. In this case, you cannot log in to the switch for the first time through the ETH port. You are advised to log in to the switch for the first time through the ETH port.

USB port

The USB port can have a USB flash drive connected to upgrade the switch, or transfer configuration files or other files. The USB port can only connect to a USB flash drive that complies with USB 2.0.

NOTE

USB flash drives from different vendors differ in model compatibility and drivers. If a USB flash drive cannot be used, try to replace it with another one from a mainstream vendor. Switches support a maximum of 128 GB USB flash drives.

Indicator Description

The S6720-30C-EI-24S-DC has the same types of indicators as the S6720-30C-EI-24S-AC. For details, see **Indicator Description**.

Power Supply Configuration

The S6720-30C-EI-24S-DC can be configured with a single power module or double power modules for 1+1 power redundancy. AC and DC power modules can be used together in the same switch.

Figure 4-60 shows the power supply connections of dual DC power modules. After DC power is transmitted to the PWR module, the PWR module provides 12 V output voltage, and the motherboard provides power for the entire device.

Figure 4-60 Power supply connections of dual DC power modules

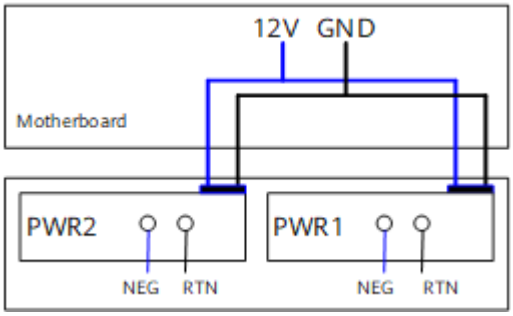

NEG: negative wire RTN: positive wire GND: 12 V reference ground

Figure 4-61 shows the power supply connections of dual AC power modules. After AC power is transmitted to the PWR module, the PWR module provides 12 V output voltage, and the motherboard provides power for the entire device.

Figure 4-61 Power supply connections of dual AC power modules

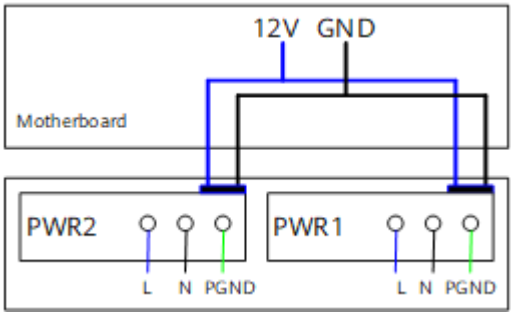

L: Live wire N: Neutral wire PGND: Protection ground wire GND: 12 V reference ground

Heat Dissipation

The S6720-30C-EI-24S-DC uses pluggable fan modules for forced air cooling. Air flows in from the left side, right side, and front panel, and exhausts from the rear panel.

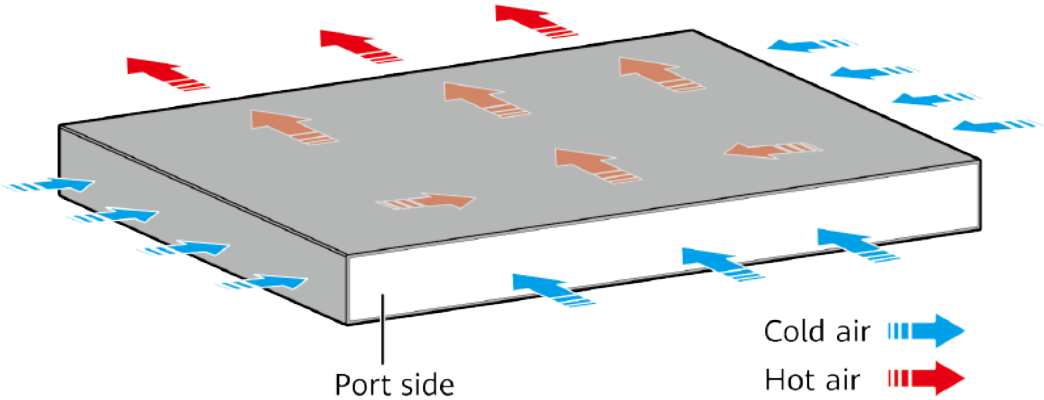

NOTE

This figure only shows the airflow direction and does not depict the actual device.

Technical Specifications

Table 4-144 lists technical specifications of the S6720-30C-EI-24S-DC.

Table 4-144 Technical specifications

Item	Description
Memory (RAM)	2 GB
Flash	512 MB in total. To view the available flash memory size, run the **display version** command.
Mean time between failures (MTBF)	80.60 years (without card)
Mean time to repair (MTTR)	2 hours
Availability	> 0.99999
Service port surge protection	NA
Power supply surge protection	• Using AC power modules: ±6 kV in differential mode, ±6 kV in common mode • Using DC power modules: ±1 kV in differential mode, ±2 kV in common mode
Dimensions (H x W x D)	• Basic dimensions (excluding the parts protruding from the body): 44.4 mm x 442.0 mm x 424.7 mm (1.75 in. x 17.4 in. x 16.72 in.) • Maximum dimensions (the depth is the distance from ports on the front panel to the handle on the rear panel): 44.4 mm x 442.0 mm x 451.8 mm (1.75 in. x 17.4 in. x 17.79 in.)
Weight (with packaging)	9.8 kg (21.61 lb)
Stack ports	• Any 10GE SFP+ ports (a maximum of 16 physical ports) • Any 40GE QSFP+ ports (a maximum of 6 physical ports)
RTC	Supported
RPS	Not supported
PoE	Not supported
Rated voltage range	100 V AC to 240 V AC, 50/60 Hz -48 V DC to -60 V DC

Item	Description
Maximum voltage range	90 V AC to 264 V AC, 47 Hz to 63 Hz -38.4 V DC to -72 V DC
Maximum power consumption (100% throughput, full speed of fans)	212.5 W
Typical power consumption (30% of traffic load, tested according to ATIS standard)	141 W (without card)
Operating temperature	0°C to 45°C (32°F to 113°F) at an altitude of 0-1800 m (0-5906 ft.) **NOTE** When the altitude is 1800-5000 m (5906-16404 ft.), the highest operating temperature reduces by 1°C (1.8°F) every time the altitude increases by 220 m (722 ft.).
Storage temperature	-40°C to +70°C (-40°F to +158°F)
Noise under normal temperature (27°C, sound power)	< 72.1 dB(A)
Relative humidity	5% to 95%, noncondensing
Operating altitude	0-5000 m (0-16404 ft.)
Certification	• EMC certification • Safety certification • Manufacturing certification
Part number	02350NHU

4.9.3 S6720-54C-EI-48S-AC

Version Mapping

Table 4-145 lists the mapping between the S6720-54C-EI-48S-AC chassis and software versions.

Table 4-145 Version mapping

Series	Model	Software Version
S6720-EI	S6720-54C-EI-48S-AC	V200R008C00 and later versions **NOTE** V200R021C01 is not supported.

Appearance and Structure

Figure 4-62 S6720-54C-EI-48S-AC appearance

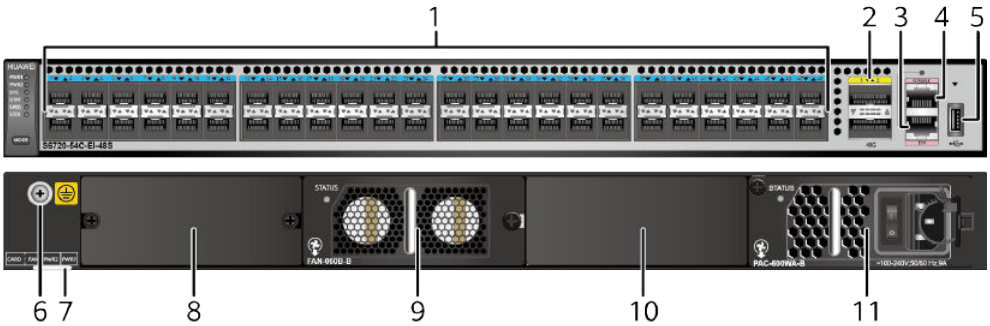

1	Forty-eight 10GE SFP+ ports Applicable modules and cables: • **GE optical module** • **GE-CWDM optical module** • **GE-DWDM optical module** • **GE copper module** (100M/1000M auto-sensing supported in V200R009 and later versions) • **10GE SFP+ optical module** (OSXD22N00 and SFP-10G-ZR not supported) • **1 m, 3 m, 5 m, and 10 m SFP+ high-speed copper cables** • **3 m and 10 m SFP+ AOC cables** • **0.5 m and 1.5 m SFP+ dedicated stack copper cables** (the last 16 ports are supported, used for zero-configuration stacking, supported in V200R011C10 and later versions)	2	Two 40GE QSFP+ ports Applicable modules and cables: • **QSFP+ optical module** • **1 m, 3 m, and 5 m QSFP+ to QSFP+ high-speed copper cables** • **1 m, 3 m, and 5 m QSFP+ to 4*SFP+ high-speed copper cables** • **10 m QSFP+ to QSFP+ AOC cable** (applicable in V200R009C00 and later versions) • **10 m QSFP+ to 4*SFP+ AOC cable** (applicable in V200R009C00 and later versions) **NOTE** A 40GE QSFP+ optical port can be split into four 10GE ports.
3	One ETH management port	4	One console port

5	One USB port	6	Ground screw **NOTE** It is used with a **ground cable**.
7	ESN label **NOTE** You can draw it out to view the ESN and MAC address of the switch.	8	Rear card slot **NOTE** Card supported: • **ES5D21Q04Q01** • **ES5D21X08S00** (applicable in V200R012C00 and later versions) • **ES5D21X04S01** (applicable in V200R019C00 and later versions)
9	Fan slot **NOTE** Applicable fan module: **6.5 FAN-060B-B (Fan box (B, FAN panel side exhaust))**	10	Power module slot 2 **NOTE** Applicable power modules: • **5.13 PDC-350WA-B (350 W DC Power Module)** • **5.14 PAC-600WA-B (600 W AC Power Module)** • **5.15 PAC-600WD-B (600 W AC Power Module)** (applicable in V200R020C10 and later versions)
11	Power module slot 1 **NOTE** Applicable power modules: • **5.13 PDC-350WA-B (350 W DC Power Module)** • **5.14 PAC-600WA-B (600 W AC Power Module)** • **5.15 PAC-600WD-B (600 W AC Power Module)** (applicable in V200R020C10 and later versions)	-	-

Port Description

10GE SFP+ port

A 10GE SFP+ Ethernet optical port supports auto-sensing to 1000 Mbit/s. It sends and receives service data at 1000 Mbit/s or 10 Gbit/s. **Table 4-146** describes the attributes of a 10GE SFP+ Ethernet optical port.

Table 4-146 Attributes of a 10GE SFP+ port

Attribute	Description
Connector type	LC/PC

Attribute	Description
Optical port attributes	Depend on the optical module used
Standards compliance	IEEE802.3ae
Working mode	GE/10GE auto-sensing

40GE QSFP+ port

A 40GE QSFP+ optical port sends and receives service traffic at 40 Gbit/s and can be split into four 10GE ports. After a split, the 40GE QSFP+ optical port needs to be connected to a remote device using a 1-to-4 QSFP+ fiber (with matching optical modules), a 1-to-4 QSFP+ AOC cable, or a 1-to-4 QSFP+ copper cable. **Table 4-147** describes the attributes of a 40GE QSFP+ optical port.

Table 4-147 Attributes of a 40GE QSFP+ optical port

Attribute	Description
Connector type	MPO/LC
Optical port attributes	Depend on the optical module used
Standards compliance	IEEE802.3ba

Console port

The console port is connected to a console for on-site configuration. The port must use a **console cable**. The console port is used when a switch is powered on for the first time. For details about the attributes of a console port, see **Table 4-148**.

Table 4-148 Attributes of a console port

Attribute	Description
Connector type	RJ45
Standards compliance	RS-232
Working mode	Duplex Universal Asynchronous Receiver/Transmitter (UART)
Baud rate	9600 bit/s, 19200 bit/s, 38400 bit/s, 57600 bit/s, or 115200 bit/s Default value: 9600 bit/s

ETH management port

You can connect a switch to a configuration terminal or network management workstation through the ETH management port to configure the switch locally or remotely. The port must use an **Ethernet cable**. You can choose to download the software package through the ETH management port in the BootLoad menu. File transfer through the ETH management port is faster than transfer through the console port. **Table 4-149** describes the attributes of an ETH management port.

Table 4-149 Attributes of an ETH management port

Attribute	Description
Connector type	RJ45
Standards compliance	IEEE802.3
Working mode	10/100 Mbit/s auto-sensing
Maximum transmission distance	100 m

In V200R012C00 and later versions, you can log in to the switch that contains the ETH management port for the first time through the ETH port. For details, see "First Login to a Switch" in the *Configuration Guide - Basic Configuration*. If you have logged in to the device for the first time by pressing and holding the MODE button for 6 seconds or longer and saved the configuration, the default configuration on the ETH port will be cleared. In this case, you cannot log in to the switch for the first time through the ETH port. You are advised to log in to the switch for the first time through the ETH port.

USB port

The USB port can have a USB flash drive connected to upgrade the switch, or transfer configuration files or other files. The USB port can only connect to a USB flash drive that complies with USB 2.0.

NOTE

USB flash drives from different vendors differ in model compatibility and drivers. If a USB flash drive cannot be used, try to replace it with another one from a mainstream vendor. Switches support a maximum of 128 GB USB flash drives.

Indicator Description

The S6720-54C-EI-48S-AC has the same types of indicators as the S6720-30C-EI-24S-AC. For details, see **Indicator Description**.

Power Supply Configuration

The S6720-54C-EI-48S-AC can be configured with a single power module or double power modules for 1+1 power redundancy. AC and DC power modules can be used together in the same switch.

Figure 4-63 shows the power supply connections of dual DC power modules. After DC power is transmitted to the PWR module, the PWR module provides 12 V output voltage, and the motherboard provides power for the entire device.

Figure 4-63 Power supply connections of dual DC power modules

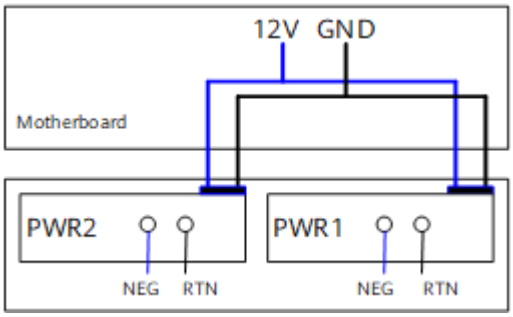

NEG: negative wire RTN: positive wire GND: 12 V reference ground

Figure 4-64 shows the power supply connections of dual AC power modules. After AC power is transmitted to the PWR module, the PWR module provides 12 V output voltage, and the motherboard provides power for the entire device.

Figure 4-64 Power supply connections of dual AC power modules

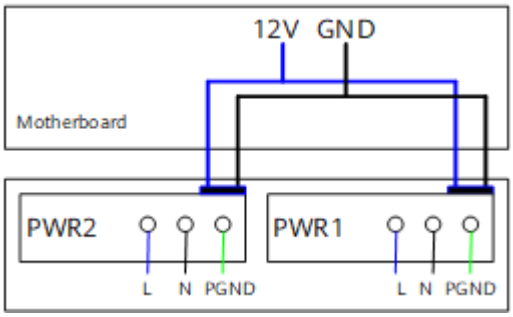

L: Live wire N: Neutral wire PGND: Protection ground wire GND: 12 V reference ground

Heat Dissipation

The S6720-54C-EI-48S-AC uses pluggable fan modules for forced air cooling. Air flows in from the left side, right side, and front panel, and exhausts from the rear panel.

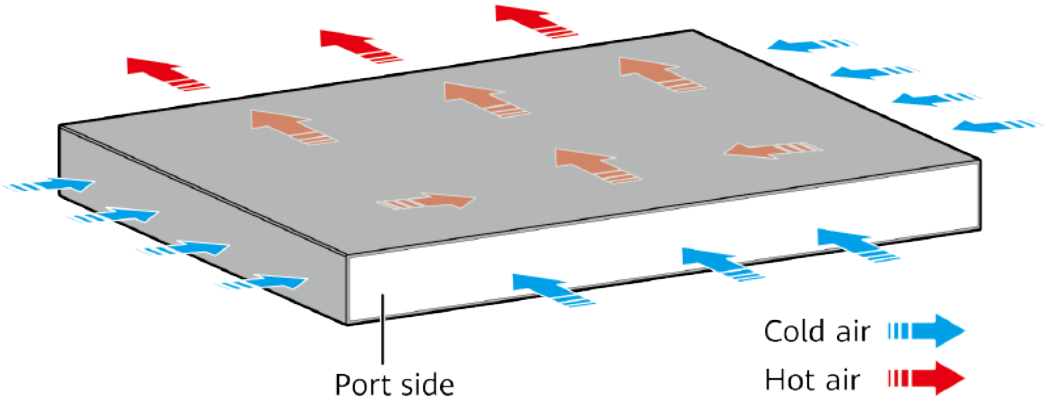

NOTE

This figure only shows the airflow direction and does not depict the actual device.

Technical Specifications

Table 4-150 lists technical specifications of the S6720-54C-EI-48S-AC.

Table 4-150 Technical specifications

Item	Description
Memory (RAM)	2 GB
Flash	512 MB in total. To view the available flash memory size, run the **display version** command.
Mean time between failures (MTBF)	79.39 years (without card)
Mean time to repair (MTTR)	2
Availability	> 0.99999
Service port surge protection	NA
Power supply surge protection	• Using AC power modules: ±6 kV in differential mode, ±6 kV in common mode • Using DC power modules: ±1 kV in differential mode, ±2 kV in common mode
Dimensions (H x W x D)	• Basic dimensions (excluding the parts protruding from the body): 44.4 mm x 442.0 mm x 424.7 mm (1.75 in. x 17.4 in. x 16.72 in.) • Maximum dimensions (the depth is the distance from ports on the front panel to the handle on the rear panel): 44.4 mm x 442.0 mm x 451.8 mm (1.75 in. x 17.4 in. x 17.79 in.)

Item	Description
Weight (with packaging)	10.2 kg (22.49 lb)
Stack ports	• Any 10GE SFP+ ports (a maximum of 16 physical ports) • Any 40GE QSFP+ ports (a maximum of 6 physical ports)
RTC	Supported
RPS	Not supported
PoE	Not supported
Rated voltage range	100 V AC to 240 V AC, 50/60 Hz -48 V DC to -60 V DC
Maximum voltage range	90 V AC to 264 V AC, 47 Hz to 63 Hz -38.4 V DC to -72 V DC
Maximum power consumption (100% throughput, full speed of fans)	296.1 W
Typical power consumption (30% of traffic load, tested according to ATIS standard)	190 W (without card)
Operating temperature	0°C to 45°C (32°F to 113°F) at an altitude of 0-1800 m (0-5906 ft.) **NOTE** When the altitude is 1800-5000 m (5906-16404 ft.), the highest operating temperature reduces by 1°C (1.8°F) every time the altitude increases by 220 m (722 ft.).
Storage temperature	-40°C to +70°C (-40°F to +158°F)
Noise under normal temperature (27°C, sound power)	< 72.1 dB(A)
Relative humidity	5% to 95%, noncondensing
Operating altitude	0-5000 m (0-16404 ft.)

Item	Description
Certification	• EMC certification • Safety certification • Manufacturing certification
Part number	02350DMP

4.9.4 S6720-54C-EI-48S-DC

Version Mapping

Table 4-151 lists the mapping between the S6720-54C-EI-48S-DC chassis and software versions.

Table 4-151 Version mapping

Series	Model	Software Version
S6720-EI	S6720-54C-EI-48S-DC	V200R009C00 and later versions **NOTE** V200R021C01 is not supported.

Appearance and Structure

Figure 4-65 S6720-54C-EI-48S-DC appearance

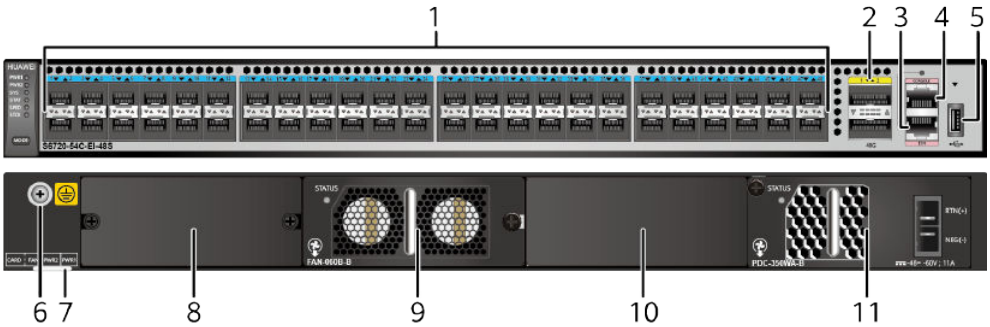

1	Forty-eight 10GE SFP+ ports Applicable modules and cables: • **GE optical module** • **GE-CWDM optical module** • **GE-DWDM optical module** • **GE copper module** (100M/1000M auto-sensing supported in V200R009 and later versions) • **10GE SFP+ optical module** (OSXD22N00 and SFP-10G-ZR not supported) • **1 m, 3 m, 5 m, and 10 m SFP+ high-speed copper cables** • **3 m and 10 m SFP+ AOC cables** • **0.5 m and 1.5 m SFP+ dedicated stack copper cables** (the last 16 ports are supported, used for zero-configuration stacking, supported in V200R011C10 and later versions)	2	Two 40GE QSFP+ ports Applicable modules and cables: • **QSFP+ optical module** • **1 m, 3 m, and 5 m QSFP+ to QSFP+ high-speed copper cables** • **1 m, 3 m, and 5 m QSFP+ to 4*SFP+ high-speed copper cables** • **10 m QSFP+ to QSFP+ AOC cable** (applicable in V200R009C00 and later versions) • **10 m QSFP+ to 4*SFP+ AOC cable** (applicable in V200R009C00 and later versions) **NOTE** A 40GE QSFP+ optical port can be split into four 10GE ports.
3	One ETH management port	4	One console port
5	One USB port	6	Ground screw **NOTE** It is used with a **ground cable**.
7	ESN label **NOTE** You can draw it out to view the ESN and MAC address of the switch.	8	Rear card slot **NOTE** Card supported: • **ES5D21Q04Q01** • **ES5D21X08S00** (applicable in V200R012C00 and later versions) • **ES5D21X04S01** (applicable in V200R019C00 and later versions)
9	Fan slot **NOTE** Applicable fan module: **6.5 FAN-060B-B (Fan box (B, FAN panel side exhaust))**	10	Power module slot 2 **NOTE** Applicable power modules: • **5.13 PDC-350WA-B (350 W DC Power Module)** • **5.14 PAC-600WA-B (600 W AC Power Module)** • **5.15 PAC-600WD-B (600 W AC Power Module)** (applicable in V200R020C10 and later versions)

1 1	Power module slot 1 **NOTE** Applicable power modules: • **5.13 PDC-350WA-B (350 W DC Power Module)** • **5.14 PAC-600WA-B (600 W AC Power Module)** • **5.15 PAC-600WD-B (600 W AC Power Module)** (applicable in V200R020C10 and later versions)	-	-

Port Description

10GE SFP+ port

A 10GE SFP+ Ethernet optical port supports auto-sensing to 1000 Mbit/s. It sends and receives service data at 1000 Mbit/s or 10 Gbit/s. **Table 4-152** describes the attributes of a 10GE SFP+ Ethernet optical port.

Table 4-152 Attributes of a 10GE SFP+ port

Attribute	Description
Connector type	LC/PC
Optical port attributes	Depend on the optical module used
Standards compliance	IEEE802.3ae
Working mode	GE/10GE auto-sensing

40GE QSFP+ port

A 40GE QSFP+ optical port sends and receives service traffic at 40 Gbit/s and can be split into four 10GE ports. After a split, the 40GE QSFP+ optical port needs to be connected to a remote device using a 1-to-4 QSFP+ fiber (with matching optical modules), a 1-to-4 QSFP+ AOC cable, or a 1-to-4 QSFP+ copper cable. **Table 4-153** describes the attributes of a 40GE QSFP+ optical port.

Table 4-153 Attributes of a 40GE QSFP+ optical port

Attribute	Description
Connector type	MPO/LC
Optical port attributes	Depend on the optical module used

Attribute	Description
Standards compliance	IEEE802.3ba

Console port

The console port is connected to a console for on-site configuration. The port must use a **console cable**. The console port is used when a switch is powered on for the first time. For details about the attributes of a console port, see **Table 4-154**.

Table 4-154 Attributes of a console port

Attribute	Description
Connector type	RJ45
Standards compliance	RS-232
Working mode	Duplex Universal Asynchronous Receiver/Transmitter (UART)
Baud rate	9600 bit/s, 19200 bit/s, 38400 bit/s, 57600 bit/s, or 115200 bit/s Default value: 9600 bit/s

ETH management port

You can connect a switch to a configuration terminal or network management workstation through the ETH management port to configure the switch locally or remotely. The port must use an **Ethernet cable**. You can choose to download the software package through the ETH management port in the BootLoad menu. File transfer through the ETH management port is faster than transfer through the console port. **Table 4-155** describes the attributes of an ETH management port.

Table 4-155 Attributes of an ETH management port

Attribute	Description
Connector type	RJ45
Standards compliance	IEEE802.3
Working mode	10/100 Mbit/s auto-sensing
Maximum transmission distance	100 m

In V200R012C00 and later versions, you can log in to the switch that contains the ETH management port for the first time through the ETH port. For details, see "First Login to a Switch" in the *Configuration Guide - Basic Configuration*. If you have logged in to the device for the first time by pressing and holding the MODE button for 6 seconds or longer and saved the configuration, the default configuration on the ETH port will be cleared. In this case, you cannot log in to the switch for the first time through the ETH port. You are advised to log in to the switch for the first time through the ETH port.

USB port

The USB port can have a USB flash drive connected to upgrade the switch, or transfer configuration files or other files. The USB port can only connect to a USB flash drive that complies with USB 2.0.

NOTE

USB flash drives from different vendors differ in model compatibility and drivers. If a USB flash drive cannot be used, try to replace it with another one from a mainstream vendor. Switches support a maximum of 128 GB USB flash drives.

Indicator Description

The S6720-54C-EI-48S-DC has the same types of indicators as the S6720-30C-EI-24S-AC. For details, see **Indicator Description**.

Power Supply Configuration

The S6720-54C-EI-48S-DC can be configured with a single power module or double power modules for 1+1 power redundancy. AC and DC power modules can be used together in the same switch.

Figure 4-66 shows the power supply connections of dual DC power modules. After DC power is transmitted to the PWR module, the PWR module provides 12 V output voltage, and the motherboard provides power for the entire device.

Figure 4-66 Power supply connections of dual DC power modules

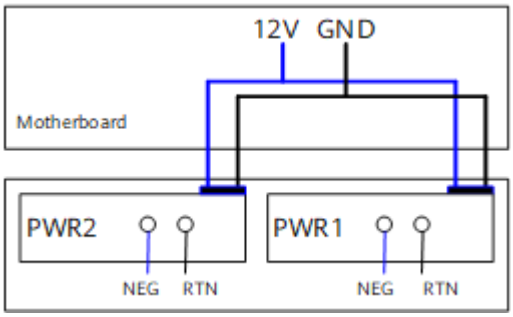

NEG: negative wire RTN: positive wire GND: 12 V reference ground

Figure 4-67 shows the power supply connections of dual AC power modules. After AC power is transmitted to the PWR module, the PWR module provides 12 V output voltage, and the motherboard provides power for the entire device.

Figure 4-67 Power supply connections of dual AC power modules

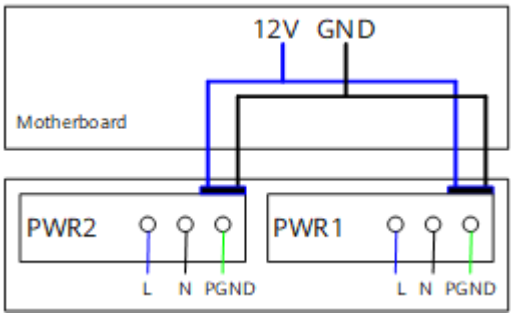

L: Live wire N: Neutral wire PGND: Protection ground wire GND: 12 V reference ground

Heat Dissipation

The S6720-54C-EI-48S-DC uses pluggable fan modules for forced air cooling. Air flows in from the left side, right side, and front panel, and exhausts from the rear panel.

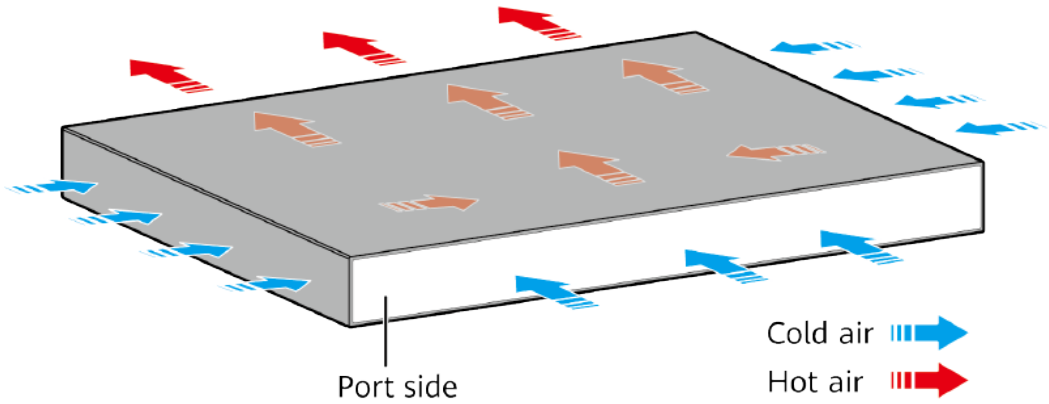

NOTE

This figure only shows the airflow direction and does not depict the actual device.

Technical Specifications

Table 4-156 lists technical specifications of the S6720-54C-EI-48S-DC.

Table 4-156 Technical specifications

Item	Description
Memory (RAM)	2 GB
Flash	512 MB in total. To view the available flash memory size, run the **display version** command.

Item	Description
Mean time between failures (MTBF)	79.39 years (without card)
Mean time to repair (MTTR)	2 hours
Availability	> 0.99999
Service port surge protection	NA
Power supply surge protection	• Using AC power modules: ±6 kV in differential mode, ±6 kV in common mode • Using DC power modules: ±1 kV in differential mode, ±2 kV in common mode
Dimensions (H x W x D)	• Basic dimensions (excluding the parts protruding from the body): 44.4 mm x 442.0 mm x 424.7 mm (1.75 in. x 17.4 in. x 16.72 in.) • Maximum dimensions (the depth is the distance from ports on the front panel to the handle on the rear panel): 44.4 mm x 442.0 mm x 451.8 mm (1.75 in. x 17.4 in. x 17.79 in.)
Weight (with packaging)	10.2 kg (22.49 lb)
Stack ports	• Any 10GE SFP+ ports (a maximum of 16 physical ports) • Any 40GE QSFP+ ports (a maximum of 6 physical ports)
RTC	Supported
RPS	Not supported
PoE	Not supported
Rated voltage range	100 V AC to 240 V AC, 50/60 Hz -48 V DC to -60 V DC
Maximum voltage range	90 V AC to 264 V AC, 47 Hz to 63 Hz -38.4 V DC to -72 V DC
Maximum power consumption (100% throughput, full speed of fans)	268.6 W

Item	Description
Typical power consumption (30% of traffic load, tested according to ATIS standard)	185 W (without card)
Operating temperature	0°C to 45°C (32°F to 113°F) at an altitude of 0-1800 m (0-5906 ft.) **NOTE** When the altitude is 1800-5000 m (5906-16404 ft.), the highest operating temperature reduces by 1°C (1.8°F) every time the altitude increases by 220 m (722 ft.).
Storage temperature	-40°C to +70°C (-40°F to +158°F)
Noise under normal temperature (27°C, sound power)	< 72.1 dB(A)
Relative humidity	5% to 95%, noncondensing
Operating altitude	0-5000 m (0-16404 ft.)
Certification	• EMC certification • Safety certification • Manufacturing certification
Part number	02350NHV

4.10 S6720S-EI

4.10.1 S6720S-26Q-EI-24S-AC

Version Mapping

Table 4-157 lists the mapping between the S6720S-26Q-EI-24S-AC chassis and software versions.

Table 4-157 Version mapping

Series	Model	Software Version
S6720S-EI	S6720S-26Q-EI-24S-AC	V200R009C00 and later versions **NOTE** V200R021C01 is not supported.

Appearance and Structure

Figure 4-68 S6720S-26Q-EI-24S-AC appearance

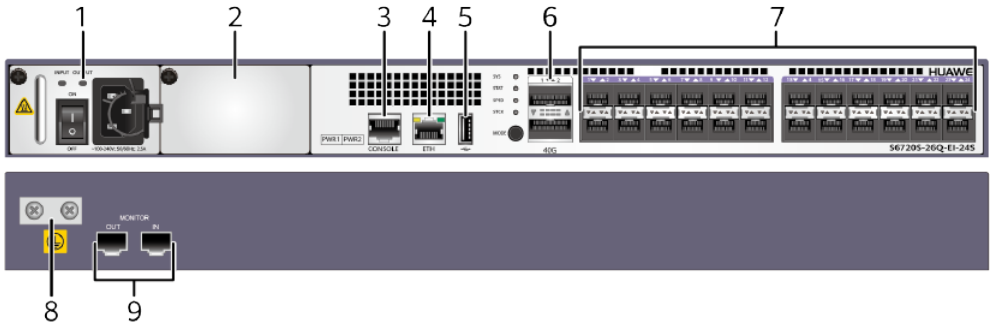

1	Power module slot 1 **NOTE** Applicable power modules: • **5.9 W0PSA1701 (170 W AC Power Module)** • **5.10 ES5M0PSD1700 (170 W DC Power Module)**	2	Power module slot 2 **NOTE** Applicable power modules: • **5.9 W0PSA1701 (170 W AC Power Module)** • **5.10 ES5M0PSD1700 (170 W DC Power Module)**
3	One console port	4	One ETH management port

5	One USB port	6	Two 40GE QSFP+ ports Applicable modules and cables: • **QSFP+ optical module** • **1 m, 3 m, and 5 m QSFP+ to QSFP+ high-speed copper cables** • **1 m, 3 m, and 5 m QSFP+ to 4*SFP+ high-speed copper cables** • **10 m QSFP+ to QSFP+ AOC cable** • **10 m QSFP+ to 4*SFP+ AOC cable** **NOTE** A 40GE QSFP+ optical port can be split into four 10GE ports.
7	Twenty-four 10GE SFP+ ports Applicable modules and cables: • **GE optical module** • **GE-CWDM optical module** • **GE-DWDM optical module** • **GE copper module (100M/1000M auto-sensing supported)** • **10GE SFP+ optical module (OSXD22N00 and SFP-10G-ZR not supported)** • **1 m, 3 m, 5 m, and 10 m SFP+ high-speed copper cables** • **3 m and 10 m SFP+ AOC cables** • **0.5 m and 1.5 m SFP+ dedicated stack copper cables (the last 16 ports are supported, used for zero-configuration stacking, supported in V200R011C10 and later versions)**	8	Ground screw **NOTE** It is used with a **ground cable**. The switch has two ground screws, any of which can be used to install a ground cable.
9	Monitoring port **NOTE** This port is reserved and cannot be used currently.	-	-

Port Description

10GE SFP+ port

A 10GE SFP+ Ethernet optical port supports auto-sensing to 1000 Mbit/s. It sends and receives service data at 1000 Mbit/s or 10 Gbit/s. **Table 4-158** describes the attributes of a 10GE SFP+ Ethernet optical port.

Table 4-158 Attributes of a 10GE SFP+ port

Attribute	Description
Connector type	LC/PC
Optical port attributes	Depend on the optical module used
Standards compliance	IEEE802.3ae
Working mode	GE/10GE auto-sensing

40GE QSFP+ port

A 40GE QSFP+ optical port sends and receives service traffic at 40 Gbit/s and can be split into four 10GE ports. After a split, the 40GE QSFP+ optical port needs to be connected to a remote device using a 1-to-4 QSFP+ fiber (with matching optical modules), a 1-to-4 QSFP+ AOC cable, or a 1-to-4 QSFP+ copper cable. **Table 4-159** describes the attributes of a 40GE QSFP+ optical port.

Table 4-159 Attributes of a 40GE QSFP+ optical port

Attribute	Description
Connector type	MPO/LC
Optical port attributes	Depend on the optical module used
Standards compliance	IEEE802.3ba

Console port

The console port is connected to a console for on-site configuration. The port must use a **console cable**. The console port is used when a switch is powered on for the first time. For details about the attributes of a console port, see **Table 4-160**.

Table 4-160 Attributes of a console port

Attribute	Description
Connector type	RJ45
Standards compliance	RS-232
Working mode	Duplex Universal Asynchronous Receiver/Transmitter (UART)
Baud rate	9600 bit/s, 19200 bit/s, 38400 bit/s, 57600 bit/s, or 115200 bit/s Default value: 9600 bit/s

ETH management port

You can connect a switch to a configuration terminal or network management workstation through the ETH management port to configure the switch locally or remotely. The port must use an **Ethernet cable**. You can choose to download the software package through the ETH management port in the BootLoad menu. File transfer through the ETH management port is faster than transfer through the console port. **Table 4-161** describes the attributes of an ETH management port.

Table 4-161 Attributes of an ETH management port

Attribute	Description
Connector type	RJ45
Standards compliance	IEEE802.3
Working mode	10/100 Mbit/s auto-sensing
Maximum transmission distance	100 m

In V200R012C00 and later versions, you can log in to the switch that contains the ETH management port for the first time through the ETH port. For details, see "First Login to a Switch" in the *Configuration Guide - Basic Configuration*. If you have logged in to the device for the first time by pressing and holding the MODE button for 6 seconds or longer and saved the configuration, the default configuration on the ETH port will be cleared. In this case, you cannot log in to the switch for the first time through the ETH port. You are advised to log in to the switch for the first time through the ETH port.

USB port

The USB port can have a USB flash drive connected to upgrade the switch, or transfer configuration files or other files. The USB port can only connect to a USB flash drive that complies with USB 2.0.

NOTE

USB flash drives from different vendors differ in model compatibility and drivers. If a USB flash drive cannot be used, try to replace it with another one from a mainstream vendor. Switches support a maximum of 128 GB USB flash drives.

Indicator Description

NOTE

Hold down the mode switch button for 6s and release it to start the web initial login mode. Either of the following situations will occur:

- If the switch has no configuration file, the system attempts to enter the web initial login mode. In this mode, the status of mode indicators is as follows:
  - If the system enters the web initial login mode successfully, all mode indicators turn green and stay on for a maximum of 10 minutes.
  - If the system fails to enter the initial login mode, all mode indicators fast blink for 10 seconds and then restore the default status.
- If the switch has a configuration file, the system cannot enter the web initial login mode. In this case, all mode indicators fast blink for 10s, and then return to the default states.

Figure 4-69 Indicators on the S6720S-26Q-EI-24S-AC

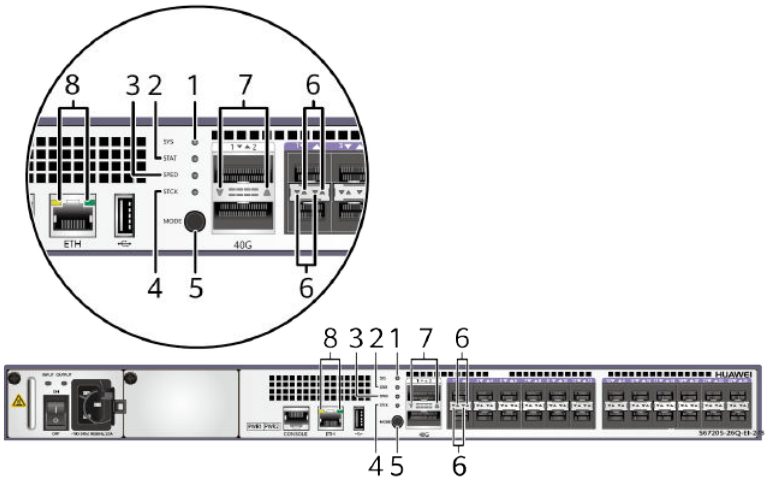

NOTE

The S6720S-EI series switches provide a command for setting fault indicators, which help field maintenance personnel find a faulty switch quickly.

The SYS indicator and mode indicators (STAT, SPED, and STCK) are used as fault indicators. When a switch is faulty, you can run the command to turn on the fault indicators. Then the SYS indicator and mode indicators fast blink red to help field maintenance personnel quickly find the faulty switch.

Table 4-162 Description of indicators on the switch

No.	Indicator	Name	Color	Status	Description
1	SYS	System status indicator	-	Off	The system is not running.
			Green	Fast blinking	The system is starting.
			Green	Slow blinking	The system is running normally.
			Red	Steady on	The system does not work normally after registration, or a fan alarm or temperature alarm has been generated.
2	STAT	Status indicator	-	Off	The status mode is not selected.
			Green	Steady on	The status mode (default mode) is selected. If the status mode is selected, the service port indicator shows the port link or activity state.
3	SPED	Speed indicator	-	Off	The speed mode is not selected.
			Green	Steady on	The service port indicators show the port speeds. After 45 seconds, the service port indicators automatically restore to the status mode.
4	STCK	Stack indicator	-	Off	• If you are not changing the indicator mode (default): The switch is in stack standby or slave state or the stacking function is not enabled on the switch. • If you are changing the indicator mode: The stack mode is not selected.
			Green	Steady on	The switch is a standby or slave switch in a stack, and the service port indicators show the stack ID of the switch.

No.	Indicator	Name	Color	Status	Description
			Green	Blinking	• If you are not changing the indicator mode (default): The switch is a stack master switch or a standalone switch with the stacking function enabled. • If you are changing the indicator mode: The switch is the master switch in a stack or a standalone switch, and the service port indicators show the stack ID of the master switch. After 45 seconds, the service port indicators automatically restore to the status mode.
5	MODE	Mode switch button	-	-	• When you press this button once, the service port indicators change to the speed mode and show the speed of each service port. • When you press this button a second time, the service port indicators change to the stack mode and show the stack ID of the local switch. • When you press this button a third time, the service port indicators restore to the default mode, and the STAT indicator turns green. If you do not press the MODE button within 45 seconds, the service port indicators restore to the default mode. In this case, the STAT indicator is steady green, the SPED indicator is off, and the STCK indicator is off or blinking green.
6	-	10GE service port indicator (two indicators for each port)	Meanings of service port indicators vary in different modes. For details, see **Table 4-163**.		

No.	Indicator	Name	Color	Status	Description
7	-	40GE service port indicator (one indicator for each port)	Meanings of service port indicators vary in different modes. For details, see **Table 4-164**.		
8	-	ETH port indicator	-	Off	The ETH port is not connected.
			Green	Steady on	The ETH port is connected.
			Green	Blinking	The ETH port is sending or receiving data.

Table 4-163 Description of 10GE service port indicators in different modes (two indicators for each port)

Display Mode	Color	Status	Description
Status	-	Off	The port is not connected or has been shut down.
	Green	Steady on	A link has been established on the port.
	Yellow	Blinking	The port is sending or receiving data.
Speed	-	Off	The port is not connected or has been shut down.
	Green and yellow	Steady on	1000M/10GE port: The port is operating at 1000 Mbit/s.
	Green and yellow	Blinking	1000M/10GE port: The port is operating at 10 Gbit/s.
Stack	-	Off	Port indicators do not show the stack ID of the switch.

Display Mode	Color	Status	Description
	Green and yellow	Steady on	The switch is not the master switch in a stack. ● If the indicator of a port is steady on, the number of this port is the stack ID of the switch. ● If the indicators of ports 1 to 9 are steady on, the stack ID of the switch is 0.
	Green and yellow	Blinking	The switch is the master switch in a stack. ● If the indicator of a port is blinking, the number of this port is the stack ID of the switch. ● If the indicators of ports 1 to 9 are blinking, the stack ID of the switch is 0.

Table 4-164 Description of 40GE service port indicators in different modes (one indicator for each port)

Display Mode	Color	Status	Description
Status	-	Off	The port is not connected or has been shut down.
	Green	Steady on	A link has been established on the port.
	Green	Blinking	The port is sending or receiving data.
Speed	-	Off	The port is not connected or has been shut down.
	Green	Steady on	The port is operating at 10 Gbit/s.
	Green	Blinking	The port is operating at 40 Gbit/s.

Power Supply Configuration

The S6720S-26Q-EI-24S-AC can be configured with a single power module or double power modules for 1+1 power redundancy. AC and DC power modules can be used together in the same switch.

Figure 4-70 shows the power supply connections of dual DC power modules. After DC power is transmitted to the PWR module, the PWR module provides 12 V output voltage, and the motherboard provides power for the entire device.

Figure 4-70 Power supply connections of dual DC power modules

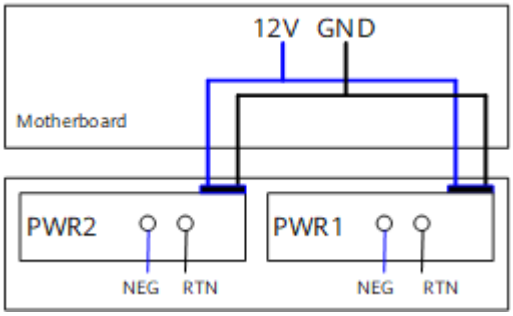

NEG: negative wire RTN: positive wire GND: 12 V reference ground

Figure 4-71 shows the power supply connections of dual AC power modules. After AC power is transmitted to the PWR module, the PWR module provides 12 V output voltage, and the motherboard provides power for the entire device.

Figure 4-71 Power supply connections of dual AC power modules

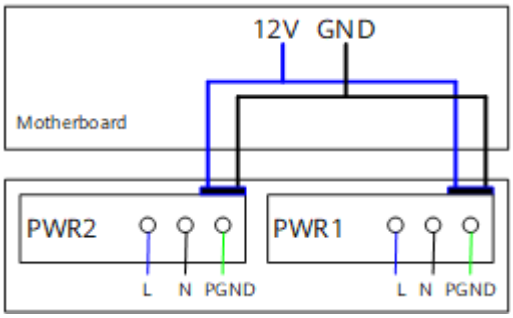

L: Live wire N: Neutral wire PGND: Protection ground wire GND: 12 V reference ground

Heat Dissipation

The S6720S-26Q-EI-24S-AC has three built-in fans for forced air cooling. Air flows in from the left side and front panel, and exhausts from the right side.

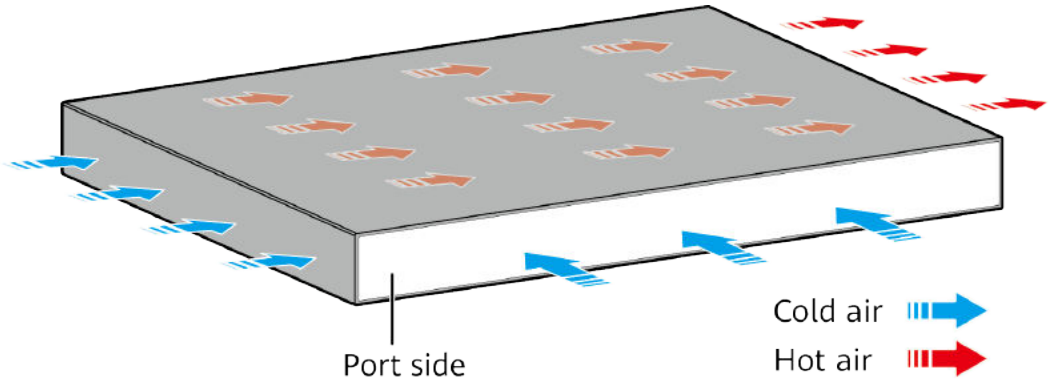

NOTE

This figure only shows the airflow direction and does not depict the actual device.

Technical Specifications

Table 4-165 lists technical specifications of the S6720S-26Q-EI-24S-AC.

Table 4-165 Technical specifications

Item	Description
Memory (RAM)	2 GB
Flash	512 MB in total. To view the available flash memory size, run the **display version** command.
Mean time between failures (MTBF)	69.53 years
Mean time to repair (MTTR)	2
Availability	> 0.99999
Service port surge protection	NA
Power supply surge protection	• Using AC power modules: ±6 kV in differential mode, ±6 kV in common mode • Using DC power modules: ±1 kV in differential mode, ±2 kV in common mode
Dimensions (H x W x D)	• Basic dimensions (excluding the parts protruding from the body): 44.4 mm x 442.0 mm x 222.3 mm (1.75 in. x 17.4 in. x 8.75 in.) • Maximum dimensions (the depth is the distance from ports on the front panel to the parts protruding from the rear panel): 44.4 mm x 442.0 mm x 250.0 mm (1.75 in. x 17.4 in. x 9.84 in.)
Weight (with packaging)	5.4 kg (11.91 lb)
Stack ports	• Any 10GE SFP+ ports (a maximum of 16 physical ports) • Any 40GE QSFP+ ports (a maximum of 2 physical ports)
RTC	Supported
RPS	Not supported
PoE	Not supported
Rated voltage range	100 V AC to 240 V AC, 50/60 Hz -48 V DC to -60 V DC

Item	Description
Maximum voltage range	90 V AC to 264 V AC, 47 Hz to 63 Hz -36 V DC to -72 V DC
Maximum power consumption (100% throughput, full speed of fans)	143.4 W
Typical power consumption (30% of traffic load, tested according to ATIS standard)	108.59 W
Operating temperature	0°C to 45°C (32°F to 113°F) at an altitude of 0-1800 m (0-5906 ft.) **NOTE** When the altitude is 1800-5000 m (5906-16404 ft.), the highest operating temperature reduces by 1°C (1.8°F) every time the altitude increases by 220 m (722 ft.).
Storage temperature	-40°C to +70°C (-40°F to +158°F)
Noise under normal temperature (27°C, sound power)	< 67.1 dB(A)
Relative humidity	5% to 95%, noncondensing
Operating altitude	• AC power modules configured: 0-5000 m (0-16404 ft.) • DC power modules configured: 0-2000 m (0-6562 ft.)
Certification	• EMC certification • Safety certification • Manufacturing certification
Part number	02350MTR

4.10.2 S6720S-26Q-EI-24S-DC

Version Mapping

Table 4-166 lists the mapping between the S6720S-26Q-EI-24S-DC chassis and software versions.

Table 4-166 Version mapping

Series	Model	Software Version
S6720S-EI	S6720S-26Q-EI-24S-DC	V200R009C00 and later versions **NOTE** V200R021C01 is not supported.

Appearance and Structure

Figure 4-72 S6720S-26Q-EI-24S-DC appearance

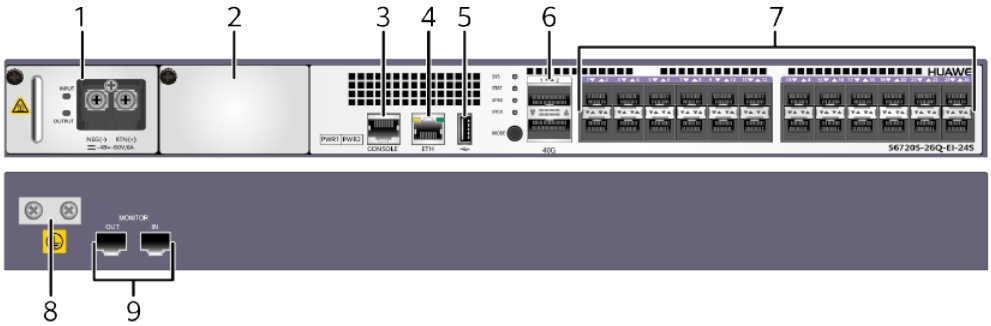

1	Power module slot 1 **NOTE** Applicable power modules: • **5.9 W0PSA1701 (170 W AC Power Module)** • **5.10 ES5M0PSD1700 (170 W DC Power Module)**	2	Power module slot 2 **NOTE** Applicable power modules: • **5.9 W0PSA1701 (170 W AC Power Module)** • **5.10 ES5M0PSD1700 (170 W DC Power Module)**
3	One console port	4	One ETH management port

5	One USB port	6	Two 40GE QSFP+ ports Applicable modules and cables: • **QSFP+ optical module** • **1 m, 3 m, and 5 m QSFP+ to QSFP+ high-speed copper cables** • **1 m, 3 m, and 5 m QSFP+ to 4*SFP+ high-speed copper cables** • **10 m QSFP+ to QSFP+ AOC cable** • **10 m QSFP+ to 4*SFP+ AOC cable** **NOTE** A 40GE QSFP+ optical port can be split into four 10GE ports.
7	Twenty-four 10GE SFP+ ports Applicable modules and cables: • **GE optical module** • **GE-CWDM optical module** • **GE-DWDM optical module** • **GE copper module (100M/1000M auto-sensing supported)** • **10GE SFP+ optical module (OSXD22N00 and SFP-10G-ZR not supported)** • **1 m, 3 m, 5 m, and 10 m SFP+ high-speed copper cables** • **3 m and 10 m SFP+ AOC cables** • **0.5 m and 1.5 m SFP+ dedicated stack copper cables (the last 16 ports are supported, used for zero-configuration stacking, supported in V200R011C10 and later versions)**	8	Ground screw **NOTE** It is used with a **ground cable**. The switch has two ground screws, any of which can be used to install a ground cable.
9	Monitoring port **NOTE** This port is reserved and cannot be used currently.	-	-

Port Description

10GE SFP+ port

A 10GE SFP+ Ethernet optical port supports auto-sensing to 1000 Mbit/s. It sends and receives service data at 1000 Mbit/s or 10 Gbit/s. **Table 4-167** describes the attributes of a 10GE SFP+ Ethernet optical port.

Table 4-167 Attributes of a 10GE SFP+ port

Attribute	Description
Connector type	LC/PC
Optical port attributes	Depend on the optical module used
Standards compliance	IEEE802.3ae
Working mode	GE/10GE auto-sensing

40GE QSFP+ port

A 40GE QSFP+ optical port sends and receives service traffic at 40 Gbit/s and can be split into four 10GE ports. After a split, the 40GE QSFP+ optical port needs to be connected to a remote device using a 1-to-4 QSFP+ fiber (with matching optical modules), a 1-to-4 QSFP+ AOC cable, or a 1-to-4 QSFP+ copper cable. **Table 4-168** describes the attributes of a 40GE QSFP+ optical port.

Table 4-168 Attributes of a 40GE QSFP+ optical port

Attribute	Description
Connector type	MPO/LC
Optical port attributes	Depend on the optical module used
Standards compliance	IEEE802.3ba

Console port

The console port is connected to a console for on-site configuration. The port must use a **console cable**. The console port is used when a switch is powered on for the first time. For details about the attributes of a console port, see **Table 4-169**.

Table 4-169 Attributes of a console port

Attribute	Description
Connector type	RJ45
Standards compliance	RS-232
Working mode	Duplex Universal Asynchronous Receiver/Transmitter (UART)
Baud rate	9600 bit/s, 19200 bit/s, 38400 bit/s, 57600 bit/s, or 115200 bit/s Default value: 9600 bit/s

ETH management port

You can connect a switch to a configuration terminal or network management workstation through the ETH management port to configure the switch locally or remotely. The port must use an **Ethernet cable**. You can choose to download the software package through the ETH management port in the BootLoad menu. File transfer through the ETH management port is faster than transfer through the console port. **Table 4-170** describes the attributes of an ETH management port.

Table 4-170 Attributes of an ETH management port

Attribute	Description
Connector type	RJ45
Standards compliance	IEEE802.3
Working mode	10/100 Mbit/s auto-sensing
Maximum transmission distance	100 m

In V200R012C00 and later versions, you can log in to the switch that contains the ETH management port for the first time through the ETH port. For details, see "First Login to a Switch" in the *Configuration Guide - Basic Configuration*. If you have logged in to the device for the first time by pressing and holding the MODE button for 6 seconds or longer and saved the configuration, the default configuration on the ETH port will be cleared. In this case, you cannot log in to the switch for the first time through the ETH port. You are advised to log in to the switch for the first time through the ETH port.

USB port

The USB port can have a USB flash drive connected to upgrade the switch, or transfer configuration files or other files. The USB port can only connect to a USB flash drive that complies with USB 2.0.

NOTE

USB flash drives from different vendors differ in model compatibility and drivers. If a USB flash drive cannot be used, try to replace it with another one from a mainstream vendor. Switches support a maximum of 128 GB USB flash drives.

Indicator Description

The S6720S-26Q-EI-24S-DC has the same types of indicators as the S6720S-26Q-EI-24S-AC. For details, see **Indicator Description**.

Power Supply Configuration

The S6720S-26Q-EI-24S-DC can be configured with a single power module or double power modules for 1+1 power redundancy. AC and DC power modules can be used together in the same switch.

Figure 4-73 shows the power supply connections of dual DC power modules. After DC power is transmitted to the PWR module, the PWR module provides 12 V output voltage, and the motherboard provides power for the entire device.

Figure 4-73 Power supply connections of dual DC power modules

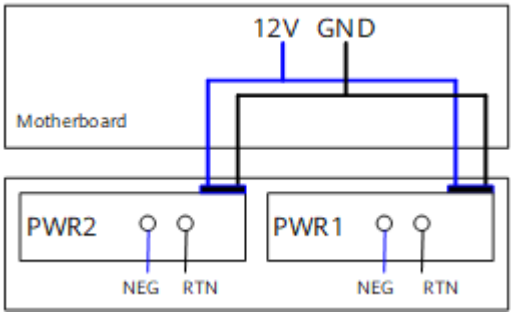

NEG: negative wire RTN: positive wire GND: 12 V reference ground

Figure 4-74 shows the power supply connections of dual AC power modules. After AC power is transmitted to the PWR module, the PWR module provides 12 V output voltage, and the motherboard provides power for the entire device.

Figure 4-74 Power supply connections of dual AC power modules

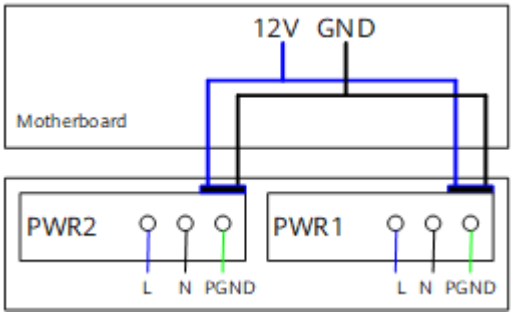

L: Live wire N: Neutral wire PGND: Protection ground wire GND: 12 V reference ground

Heat Dissipation

The S6720S-26Q-EI-24S-DC has three built-in fans for forced air cooling. Air flows in from the left side and front panel, and exhausts from the right side.

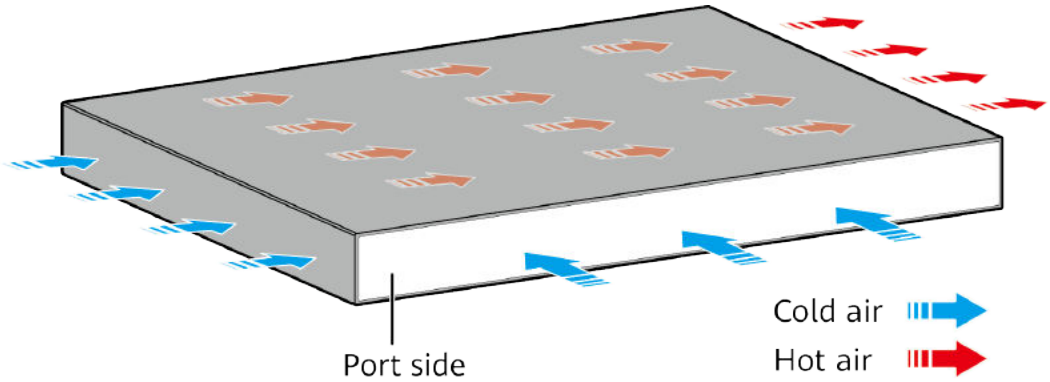

NOTE

This figure only shows the airflow direction and does not depict the actual device.

Technical Specifications

Table 4-171 lists technical specifications of the S6720S-26Q-EI-24S-DC.

Table 4-171 Technical specifications

Item	Description
Memory (RAM)	2 GB
Flash	512 MB in total. To view the available flash memory size, run the **display version** command.
Mean time between failures (MTBF)	69.53 years

Item	Description
Mean time to repair (MTTR)	2
Availability	> 0.99999
Service port surge protection	NA
Power supply surge protection	• Using AC power modules: ±6 kV in differential mode, ±6 kV in common mode • Using DC power modules: ±1 kV in differential mode, ±2 kV in common mode
Dimensions (H x W x D)	• Basic dimensions (excluding the parts protruding from the body): 44.4 mm x 442.0 mm x 222.3 mm (1.75 in. x 17.4 in. x 8.75 in.) • Maximum dimensions (the depth is the distance from ports on the front panel to the parts protruding from the rear panel): 44.4 mm x 442.0 mm x 250.0 mm (1.75 in. x 17.4 in. x 9.84 in.)
Weight (with packaging)	5.2 kg (11.47 lb)
Stack ports	• Any 10GE SFP+ ports (a maximum of 16 physical ports) • Any 40GE QSFP+ ports (a maximum of 2 physical ports)
RTC	Supported
RPS	Not supported
PoE	Not supported
Rated voltage range	100 V AC to 240 V AC, 50/60 Hz -48 V DC to -60 V DC
Maximum voltage range	90 V AC to 264 V AC, 47 Hz to 63 Hz -36 V DC to -72 V DC
Maximum power consumption (100% throughput, full speed of fans)	126.3 W
Typical power consumption (30% of traffic load, tested according to ATIS standard)	101.31 W

Item	Description
Operating temperature	0°C to 45°C (32°F to 113°F) at an altitude of 0-1800 m (0-5906 ft.) **NOTE** When the altitude is 1800-5000 m (5906-16404 ft.), the highest operating temperature reduces by 1°C (1.8°F) every time the altitude increases by 220 m (722 ft.).
Storage temperature	-40°C to +70°C (-40°F to +158°F)
Noise under normal temperature (27°C, sound power)	< 67.1 dB(A)
Relative humidity	5% to 95%, noncondensing
Operating altitude	• AC power modules configured: 0-5000 m (0-16404 ft.) • DC power modules configured: 0-2000 m (0-6562 ft.)
Certification	• EMC certification • Safety certification • Manufacturing certification
Part number	02350MTS

4.11 S6720-HI

4.11.1 S6720-30L-HI-24S

Version Mapping

Table 4-172 lists the mapping between the S6720-30L-HI-24S chassis and software versions.

Table 4-172 Version mapping

Series	Model	Software Version
S6720-HI	S6720-30L-HI-24S	V200R012C00 to V200R019C10 versions

Appearance and Structure

Figure 4-75 S6720-30L-HI-24S appearance

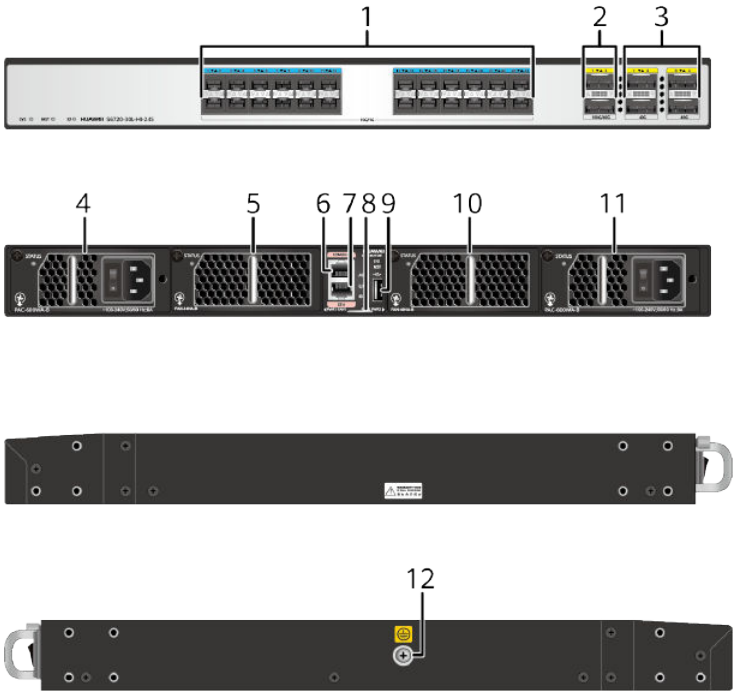

1	Twenty-four 10GE SFP+ ports Applicable modules and cables: • **GE optical module** • **GE-CWDM optical module** • **GE-DWDM optical module** • **GE copper module (100M/1000M auto-sensing)** • **10GE SFP+ optical module (OSXD22N00 not supported)** • **10GE-CWDM optical module** • **10GE-DWDM optical module** • **1 m, 3 m, 5 m, and 10 m SFP+ high-speed copper cables** • **3 m and 10 m SFP+ AOC cables** • **0.5 m and 1.5 m SFP+ dedicated stack copper cables (the last 16 ports are supported, used for zero-configuration stacking)**	2	Two 100GE/40GE QSFP28 ports Applicable modules and cables: • **QSFP+ optical module** • **QSFP28 optical module** (QSFP-100G-ER4 not supported) • **1 m, 3 m, and 5 m QSFP+ to QSFP+ high-speed copper cables** • **10 m QSFP+ to QSFP+ AOC cable** • **1 m, 3 m, and 5 m QSFP28 to QSFP28 high-speed copper cables** • **10 m QSFP28 to QSFP28 AOC cable** **NOTE** A QSFP28 optical port cannot be split into four 10GE ports. The default rate is 100 Gbit/s.

3	Four 40GE QSFP+ ports Applicable modules and cables: • **QSFP+ optical module** • **1 m, 3 m, and 5 m QSFP+ to QSFP+ high-speed copper cables** • **10 m QSFP+ to QSFP+ AOC cable** **NOTE** A 40GE QSFP+ optical port cannot be split into four 10GE ports.	4	Power module slot 1 **NOTE** Applicable power modules: • **5.13 PDC-350WA-B (350 W DC Power Module)** • **5.14 PAC-600WA-B (600 W AC Power Module)**
5	Fan slot 1 **NOTE** Applicable fan module: **6.2 FAN-40HA-B Fan Module**	6	One console port
7	One ETH management port	8	ESN label **NOTE** You can draw it out to view the ESN and MAC address of the switch.
9	One USB port	10	Fan slot 2 **NOTE** Applicable fan module: **6.2 FAN-40HA-B Fan Module**
11	Power module slot 2 **NOTE** Applicable power modules: • **5.13 PDC-350WA-B (350 W DC Power Module)** • **5.14 PAC-600WA-B (600 W AC Power Module)**	12	Ground screw **NOTE** It is used with a **ground cable**.

Port Description

10GE SFP+ port

A 10GE SFP+ Ethernet optical port supports auto-sensing to 1000 Mbit/s. It sends and receives service data at 1000 Mbit/s or 10 Gbit/s. **Table 4-173** describes the attributes of a 10GE SFP+ Ethernet optical port.

Table 4-173 Attributes of a 10GE SFP+ port

Attribute	Description
Connector type	LC/PC
Optical port attributes	Depend on the optical module used
Standards compliance	IEEE802.3ae
Working mode	GE/10GE auto-sensing

100GE/40GE QSFP28 port

A 100GE/40GE QSFP28 optical port sends and receives service traffic at 40 or 100 Gbit/s. **Table 4-174** describes the attributes of a QSFP28 optical port.

Table 4-174 Attributes of a QSFP28 optical port

Attribute	Description
Connector type	MPO/LC
Optical port attributes	Depend on the optical module used
Standards compliance	IEEE802.3ba

40GE QSFP+ port

A 40GE QSFP+ optical port sends and receives service traffic at 40 Gbit/s. **Table 4-175** describes the attributes of a 40GE QSFP+ optical port.

Table 4-175 Attributes of a 40GE QSFP+ optical port

Attribute	Description
Connector type	MPO/LC
Optical port attributes	Depend on the optical module used
Standards compliance	IEEE802.3ba

Console port

The console port is connected to a console for on-site configuration. The port must use a **console cable**. The console port is used when a switch is powered on

for the first time. For details about the attributes of a console port, see **Table 4-176**.

Table 4-176 Attributes of a console port

Attribute	Description
Connector type	RJ45
Standards compliance	RS-232
Working mode	Duplex Universal Asynchronous Receiver/Transmitter (UART)
Baud rate	9600 bit/s, 19200 bit/s, 38400 bit/s, 57600 bit/s, or 115200 bit/s Default value: 9600 bit/s

ETH management port

You can connect a switch to a configuration terminal or network management workstation through the ETH management port to configure the switch locally or remotely. The port must use an **Ethernet cable**. You can choose to download the software package through the ETH management port in the BootLoad menu. File transfer through the ETH management port is faster than transfer through the console port. **Table 4-177** describes the attributes of an ETH management port.

Table 4-177 Attributes of an ETH management port

Attribute	Description
Connector type	RJ45
Standards compliance	IEEE802.3
Working mode	10/100 Mbit/s auto-sensing
Maximum transmission distance	100 m

In V200R012C00 and later versions, you can log in to the switch that contains the ETH management port for the first time through the ETH port. For details, see "First Login to a Switch" in the *Configuration Guide - Basic Configuration*. If you have logged in to the device for the first time by pressing and holding the MODE button for 6 seconds or longer and saved the configuration, the default configuration on the ETH port will be cleared. In this case, you cannot log in to the switch for the first time through the ETH port. You are advised to log in to the switch for the first time through the ETH port.

USB port

The USB port can have a USB flash drive connected to upgrade the switch, or transfer configuration files or other files. The USB port can only connect to a USB flash drive that complies with USB 2.0.

NOTE

USB flash drives from different vendors differ in model compatibility and drivers. If a USB flash drive cannot be used, try to replace it with another one from a mainstream vendor. Switches support a maximum of 128 GB USB flash drives.

Indicator Description

The S6720-30L-HI-24S has the same types of indicators as the S6720-50L-HI-48S. For details, see **Indicator Description**.

Power Supply Configuration

The S6720-30L-HI-24S uses pluggable power modules. It can be configured with a single power module or double power modules for 1+1 power redundancy. Pluggable AC and DC power modules can be used together in the same switch.

Figure 4-76 shows the power supply connections of dual DC power modules. After DC power is transmitted to the PWR module, the PWR module provides 12 V output voltage, and the motherboard provides power for the entire device.

Figure 4-76 Power supply connections of dual DC power modules

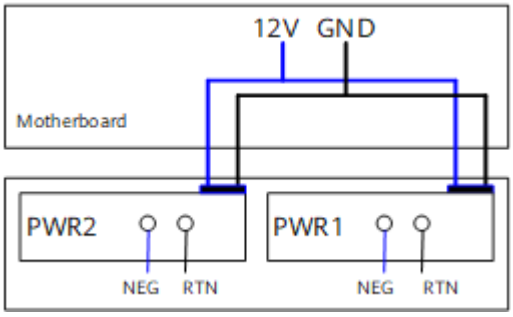

NEG: negative wire RTN: positive wire GND: 12 V reference ground

Figure 4-77 shows the power supply connections of dual AC power modules. After AC power is transmitted to the PWR module, the PWR module provides 12 V output voltage, and the motherboard provides power for the entire device.

Figure 4-77 Power supply connections of dual AC power modules

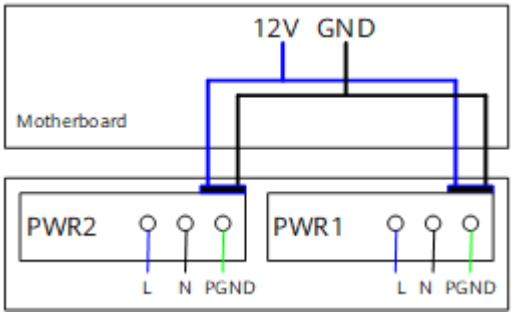

L: Live wire N: Neutral wire PGND: Protection ground wire GND: 12 V reference ground

Heat Dissipation

The S6720-30L-HI-24S uses pluggable fan modules for forced air cooling. The airflow direction is front-to-rear.

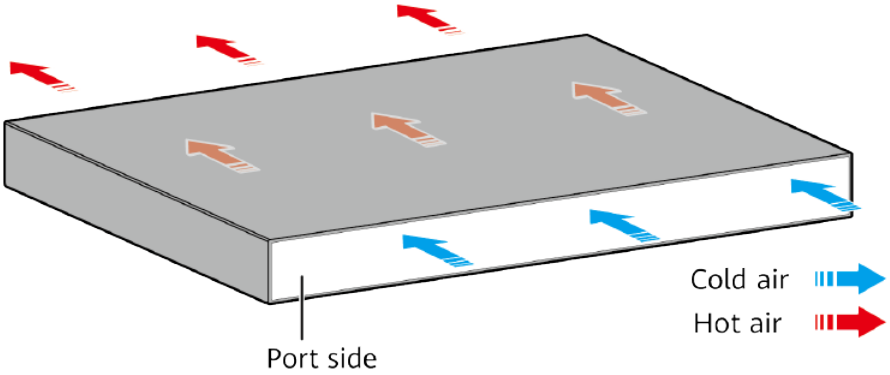

NOTE

This figure only shows the airflow direction and does not depict the actual device.

Technical Specifications

Table 4-178 lists technical specifications of the S6720-30L-HI-24S.

Table 4-178 Technical specifications

Item	Description
Memory (RAM)	2 GB
Flash	1 GB in total. To view the available flash memory size, run the **display version** command.
Mean time between failures (MTBF)	61.42 years

Item	Description
Mean time to repair (MTTR)	2 hours
Availability	> 0.99999
Service port surge protection	NA
Power supply surge protection	• Using AC power modules: ±6 kV in differential mode, ±6 kV in common mode • Using DC power modules: ±1 kV in differential mode, ±2 kV in common mode
Dimensions (H x W x D)	• Basic dimensions (excluding the parts protruding from the body): 43.6 mm x 442.0 mm x 420.0 mm (1.72 in. x 17.4 in. x 16.5 in.) • Maximum dimensions (the depth is the distance from ports on the front panel to the handle on the rear panel): 43.6 mm x 442.0 mm x 445.6 mm (1.72 in. x 17.4 in. x 17.54 in.)
Weight (with packaging)	9.9 kg (21.83 lb)
Stack ports	• Any 10GE SFP+ ports (a maximum of 16 physical ports) • Any 40GE QSFP+ ports (a maximum of 6 physical ports) • Any 100GE QSFP28 ports (a maximum of 2 physical ports)
RTC	Supported
RPS	Not supported
PoE	Not supported
Rated voltage range	100 V AC to 240 V AC, 50/60 Hz -48 V DC to -60 V DC
Maximum voltage range	90 V AC to 264 V AC, 47 Hz to 63 Hz -38.4 V DC to -72 V DC
Maximum power consumption (100% throughput, full speed of fans)	232 W

Item	Description
Typical power consumption (30% of traffic load, tested according to ATIS standard)	138 W
Operating temperature	0°C to 45°C (32°F to 113°F) at an altitude of 0-1800 m (0-5906 ft.) **NOTE** When the altitude is 1800-5000 m (5906-16404 ft.), the highest operating temperature reduces by 1°C (1.8°F) every time the altitude increases by 220 m (722 ft.).
Storage temperature	-40°C to +70°C (-40°F to +158°F)
Noise under normal temperature (27°C, sound power)	< 65 dB(A)
Relative humidity	5% to 95%, noncondensing
Operating altitude	0-5000 m (0-16404 ft.)
Certification	• EMC certification • Safety certification • Manufacturing certification
Part number	02351MXR

4.11.2 S6720-50L-HI-48S

Version Mapping

Table 4-179 lists the mapping between the S6720-50L-HI-48S chassis and software versions.

Table 4-179 Version mapping

Series	Model	Software Version
S6720-HI	S6720-50L-HI-48S	V200R012C00 to V200R019C10 versions

Appearance and Structure

Figure 4-78 S6720-50L-HI-48S appearance

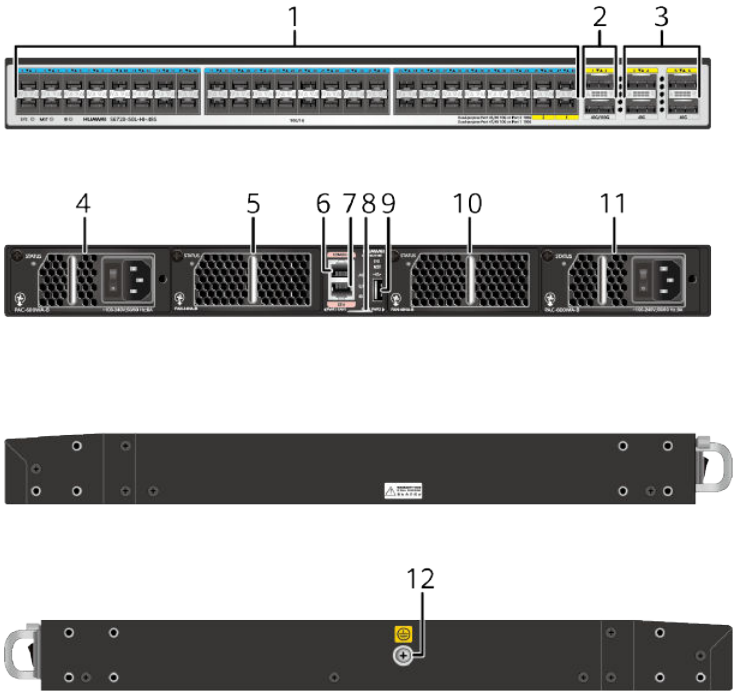

1	Forty-eight 10GE SFP+ ports Applicable modules and cables: • **GE optical module** • **GE-CWDM optical module** • **GE-DWDM optical module** • **GE copper module (100M/1000M auto-sensing)** • **10GE SFP+ optical module (OSXD22N00 not supported)** • **10GE-CWDM optical module** • **10GE-DWDM optical module** • **1 m, 3 m, 5 m, and 10 m SFP+ high-speed copper cables** • **3 m and 10 m SFP+ AOC cables** • **0.5 m and 1.5 m SFP+ dedicated stack copper cables (the last 16 ports are supported, used for zero-configuration stacking)**	2	Two 40GE/100GE QSFP28 ports Applicable modules and cables: • **QSFP+ optical module** • **QSFP28 optical module** (QSFP-100G-ER4 not supported) • **1 m, 3 m, and 5 m QSFP+ to QSFP+ high-speed copper cables** • **10 m QSFP+ to QSFP+ AOC cable** • **1 m, 3 m, and 5 m QSFP28 to QSFP28 high-speed copper cables** • **10 m QSFP28 to QSFP28 AOC cable** **NOTE** A QSFP28 optical port cannot be split into four 10GE ports. The default rate is 40 Gbit/s, and you can run the **set device port-config-mode 100g-port enable** command to change the rate to 100 Gbit/s. When you run the command on either of the ports, both ports are configured to work at the rate of 100 Gbit/s simultaneously. After the rate is changed from 40 Gbit/s to 100 Gbit/s, ports 10GE0/0/45 to 10GE0/0/48 become unavailable.
3	Four 40GE QSFP+ ports Applicable modules and cables: • **QSFP+ optical module** • **1 m, 3 m, and 5 m QSFP+ to QSFP+ high-speed copper cables** • **10 m QSFP+ to QSFP+ AOC cable** **NOTE** A 40GE QSFP+ optical port cannot be split into four 10GE ports.	4	Power module slot 1 **NOTE** Applicable power modules: • **5.13 PDC-350WA-B (350 W DC Power Module)** • **5.14 PAC-600WA-B (600 W AC Power Module)**
5	Fan slot 1 **NOTE** Applicable fan module: **6.2 FAN-40HA-B Fan Module**	6	One console port

7	One ETH management port	8	ESN label **NOTE** You can draw it out to view the ESN and MAC address of the switch.
9	One USB port	10	Fan slot 2 **NOTE** Applicable fan module: **6.2 FAN-40HA-B Fan Module**
11	Power module slot 2 **NOTE** Applicable power modules: • **5.13 PDC-350WA-B (350 W DC Power Module)** • **5.14 PAC-600WA-B (600 W AC Power Module)**	12	Ground screw **NOTE** It is used with a **ground cable**.

Port Description

10GE SFP+ port

A 10GE SFP+ Ethernet optical port supports auto-sensing to 1000 Mbit/s. It sends and receives service data at 1000 Mbit/s or 10 Gbit/s. **Table 4-180** describes the attributes of a 10GE SFP+ Ethernet optical port.

Table 4-180 Attributes of a 10GE SFP+ port

Attribute	Description
Connector type	LC/PC
Optical port attributes	Depend on the optical module used
Standards compliance	IEEE802.3ae
Working mode	GE/10GE auto-sensing

40GE/100GE QSFP28 port

A 40GE/100GE QSFP28 optical port sends and receives service traffic at 40 or 100 Gbit/s. **Table 4-181** describes the attributes of a QSFP28 optical port.

Table 4-181 Attributes of a QSFP28 optical port

Attribute	Description
Connector type	MPO/LC
Optical port attributes	Depend on the optical module used
Standards compliance	IEEE802.3ba

40GE QSFP+ port

A 40GE QSFP+ optical port sends and receives service traffic at 40 Gbit/s. **Table 4-182** describes the attributes of a 40GE QSFP+ optical port.

Table 4-182 Attributes of a 40GE QSFP+ optical port

Attribute	Description
Connector type	MPO/LC
Optical port attributes	Depend on the optical module used
Standards compliance	IEEE802.3ba

Console port

The console port is connected to a console for on-site configuration. The port must use a **console cable**. The console port is used when a switch is powered on for the first time. For details about the attributes of a console port, see **Table 4-183**.

Table 4-183 Attributes of a console port

Attribute	Description
Connector type	RJ45
Standards compliance	RS-232
Working mode	Duplex Universal Asynchronous Receiver/Transmitter (UART)
Baud rate	9600 bit/s, 19200 bit/s, 38400 bit/s, 57600 bit/s, or 115200 bit/s Default value: 9600 bit/s

ETH management port

You can connect a switch to a configuration terminal or network management workstation through the ETH management port to configure the switch locally or remotely. The port must use an **Ethernet cable**. You can choose to download the software package through the ETH management port in the BootLoad menu. File transfer through the ETH management port is faster than transfer through the console port. **Table 4-184** describes the attributes of an ETH management port.

Table 4-184 Attributes of an ETH management port

Attribute	Description
Connector type	RJ45
Standards compliance	IEEE802.3
Working mode	10/100 Mbit/s auto-sensing
Maximum transmission distance	100 m

In V200R012C00 and later versions, you can log in to the switch that contains the ETH management port for the first time through the ETH port. For details, see "First Login to a Switch" in the *Configuration Guide - Basic Configuration*. If you have logged in to the device for the first time by pressing and holding the MODE button for 6 seconds or longer and saved the configuration, the default configuration on the ETH port will be cleared. In this case, you cannot log in to the switch for the first time through the ETH port. You are advised to log in to the switch for the first time through the ETH port.

USB port

The USB port can have a USB flash drive connected to upgrade the switch, or transfer configuration files or other files. The USB port can only connect to a USB flash drive that complies with USB 2.0.

NOTE

USB flash drives from different vendors differ in model compatibility and drivers. If a USB flash drive cannot be used, try to replace it with another one from a mainstream vendor. Switches support a maximum of 128 GB USB flash drives.

Indicator Description

Figure 4-79 Indicators on the S6720-50L-HI-48S

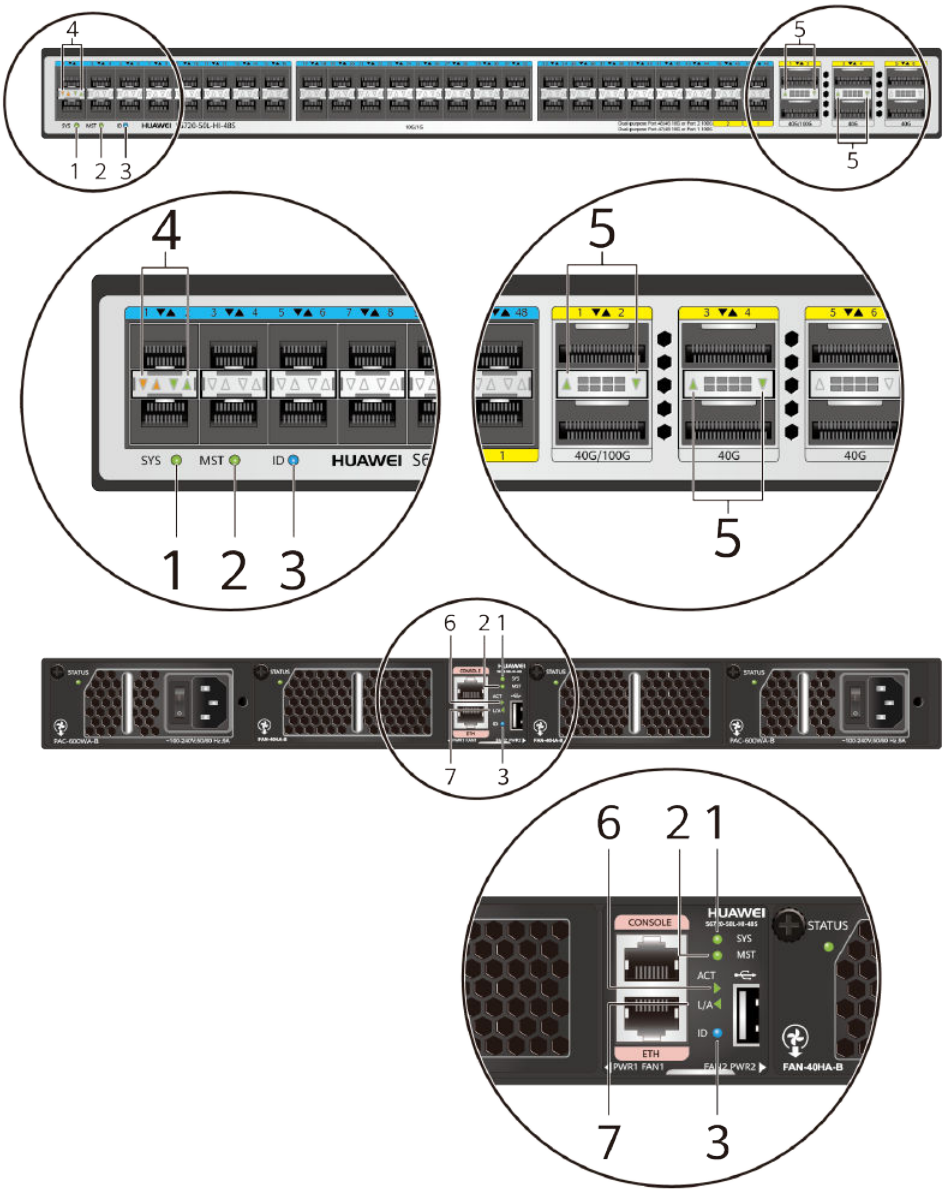

Table 4-185 Description of indicators on the switch

No.	Indicator	Name	Color	Status	Description
1	SYS	System status	-	Off	The system is not running.

No.	Indicator	Name	Color	Status	Description
		indicator	Green	Fast blinking	The system is starting.
			Green	Steady on	In the system startup preparation phase, the SYS indicator is steady green for no more than 15 seconds.
			Green	Slow blinking	The system is running normally.
			Red	Steady on	The system does not work normally after registration, or a fan alarm or temperature alarm has been generated.
2	MST	stack indicator	-	Off	The switch is not a stack master.
			Green	Steady on	The switch is a stack master or standalone switch.
3	ID	ID indicator	-	Off	The ID indicator is not used (default state).
			Blue	Steady on	The indicator identifies the switch to maintain. The ID indicator can be turned on or off remotely to help field engineers find the switch to maintain.
4	-	Service port indicator (10GE optical port)	-	Off	The port is not connected or has been shut down.
			Green	Steady on	The port is connected.
			-	Off	The port is not sending or receiving data.
			Yellow	Blinking	The port is sending or receiving data.
5	-	Service port indicator (40GE or 40GE/100GE optical port)	-	Off	The port is not connected or has been shut down.
			Green	Steady on	The port is connected.
			Green	Blinking	The port is sending or receiving data.

No.	Indicator	Name	Color	Status	Description
6	ACT	USB-based deployment indicator	-	Off	• No USB flash drive is connected to the switch. • The USB port is damaged. • The indicator is damaged. • The USB flash drive does not have any configuration file and cannot be used for deployment. • The switch has been upgraded using the USB flash drive and is restarting.
			Green	Steady on	A USB-based deployment has been completed.
			Green	Blinking	The system is reading data from the USB flash drive.
			Yellow	Steady on	The switch has copied all the required files and completed the file check. The USB flash drive can be removed from the switch.
			Red	Blinking	An error has occurred when the system is executing the configuration file or reading data from the USB flash drive.
7	L/A	ETH port indicator	-	Off	The ETH port is not connected.
			Green	Steady on	The ETH port is connected.
			Green	Blinking	The ETH port is sending or receiving data.

Power Supply Configuration

The S6720-50L-HI-48S uses pluggable power modules. It can be configured with a single power module or double power modules for 1+1 power redundancy. Pluggable AC and DC power modules can be used together in the same switch.

Figure 4-80 shows the power supply connections of dual DC power modules. After DC power is transmitted to the PWR module, the PWR module provides 12 V output voltage, and the motherboard provides power for the entire device.

Figure 4-80 Power supply connections of dual DC power modules

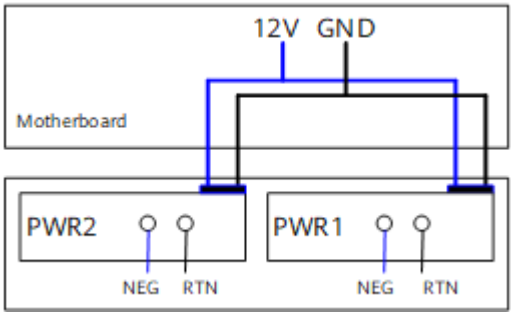

NEG: negative wire RTN: positive wire GND: 12 V reference ground

Figure 4-81 shows the power supply connections of dual AC power modules. After AC power is transmitted to the PWR module, the PWR module provides 12 V output voltage, and the motherboard provides power for the entire device.

Figure 4-81 Power supply connections of dual AC power modules

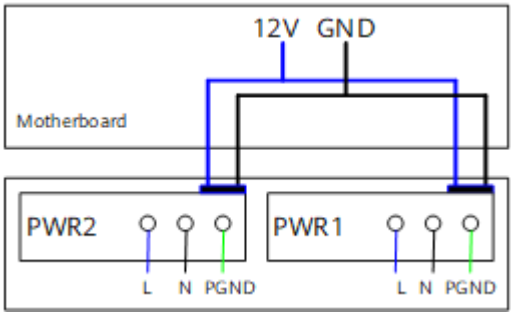

L: Live wire N: Neutral wire PGND: Protection ground wire GND: 12 V reference ground

Heat Dissipation

The S6720-50L-HI-48S uses pluggable fan modules for forced air cooling. The airflow direction is front-to-rear.

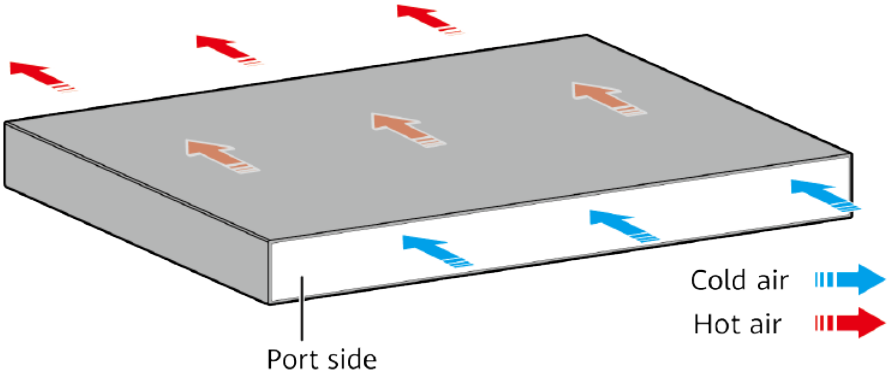

NOTE

This figure only shows the airflow direction and does not depict the actual device.

Technical Specifications

Table 4-186 lists technical specifications of the S6720-50L-HI-48S.

Table 4-186 Technical specifications

Item	Description
Memory (RAM)	2 GB
Flash	1 GB in total. To view the available flash memory size, run the **display version** command.
Mean time between failures (MTBF)	54.65 years
Mean time to repair (MTTR)	2 hours
Availability	> 0.99999
Service port surge protection	NA
Power supply surge protection	• Using AC power modules: ±6 kV in differential mode, ±6 kV in common mode • Using DC power modules: ±1 kV in differential mode, ±2 kV in common mode
Dimensions (H x W x D)	• Basic dimensions (excluding the parts protruding from the body): 43.6 mm x 442.0 mm x 420.0 mm (1.72 in. x 17.4 in. x 16.5 in.) • Maximum dimensions (the depth is the distance from ports on the front panel to the handle on the rear panel): 43.6 mm x 442.0 mm x 445.6 mm (1.72 in. x 17.4 in. x 17.54 in.)
Weight (with packaging)	10.2 kg (22.49 lb)
Stack ports	• The last 36 10GE SFP+ ports (a maximum of 16 physical ports) • Any 40GE QSFP+ ports (a maximum of 6 physical ports) • Any 100GE QSFP28 ports (a maximum of 2 physical ports)
RTC	Supported
RPS	Not supported

Item	Description
PoE	Not supported
Rated voltage range	100 V AC to 240 V AC, 50/60 Hz -48 V DC to -60 V DC
Maximum voltage range	90 V AC to 264 V AC, 47 Hz to 63 Hz -38.4 V DC to -72 V DC
Maximum power consumption (100% throughput, full speed of fans)	279 W
Typical power consumption (30% of traffic load, tested according to ATIS standard)	194 W
Operating temperature	0°C to 45°C (32°F to 113°F) at an altitude of 0-1800 m (0-5906 ft.) **NOTE** When the altitude is 1800-5000 m (5906-16404 ft.), the highest operating temperature reduces by 1°C (1.8°F) every time the altitude increases by 220 m (722 ft.).
Storage temperature	-40°C to +70°C (-40°F to +158°F)
Noise under normal temperature (27°C, sound power)	< 65 dB(A)
Relative humidity	5% to 95%, noncondensing
Operating altitude	0-5000 m (0-16404 ft.)
Certification	• EMC certification • Safety certification • Manufacturing certification
Part number	02351MXN

4.12 S6730-H

4.12.1 S6730-H24X6C (02352FSG/02352FSG-001/02352FSG-005/02352FSG-007/02353GFC/02353GFC-001/02353GFC-003/02353GFC-004)

Version Mapping

Table 4-187 lists the mapping between the S6730-H24X6C chassis and software versions.

Table 4-187 Version mapping

Series	Model	Software Version
S6730-H	S6730-H24X6C	02352FSG: V200R013C02 and later versions 02352FSG-001: V200R020C10 and later versions 02352FSG-005: V200R021C10SPC500 and later versions (If V200R021C00SPC100 is used, install V200R021SPH011 or a later patch.) 02352FSG-007: V200R021C10SPC600 and later versions (If V200R021C00SPC100 is used, install V200R021SPH013 or a later patch.) 02353GFC: V200R013C02 and later versions 02353GFC-001: V200R020C10 and later versions 02353GFC-003: V200R021C10SPC500 and later versions (If V200R021C00SPC100 is used, install V200R021SPH011 or a later patch.) 02353GFC-004: V200R021C10SPC600 and later versions (If V200R021C00SPC100 is used, install V200R021SPH013 or a later patch.) **NOTE** V200R021C01 is not supported. Some models cannot be downgraded due to component upgrade. Therefore, you are advised to run the **display system-software information** command (supported in V200R021C00 and later versions) to check the software versions supported by the device before performing a downgrade.

Appearance and Structure

Figure 4-82 S6730-H24X6C appearance

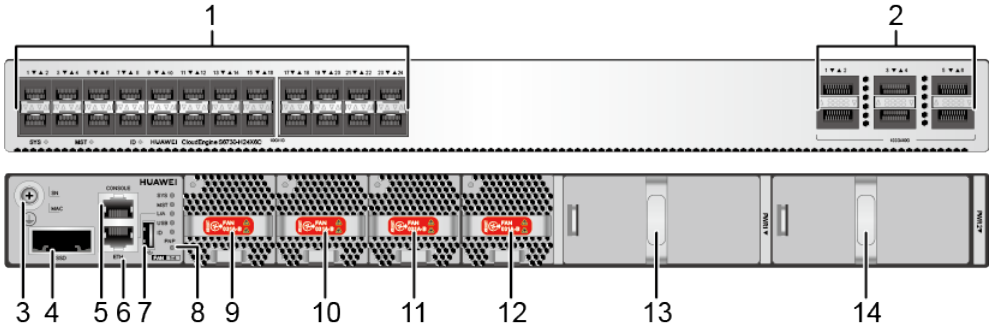

1	Twenty-four 10GE SFP+ ports Applicable modules and cables: • **GE optical module** • **GE-CWDM optical module** • **GE-DWDM optical module** • **GE copper module** • **10GE SFP+ optical module (OSXD22N00 not supported)** • **10GE-CWDM optical module** • **10GE-DWDM optical module** • **1 m, 3 m, 5 m, and 10 m SFP+ high-speed copper cables** • **3 m and 10 m SFP+ AOC cables** • **0.5 m and 1.5 m SFP+ dedicated stack cables (supported by the last 16 SFP+ ports and used only for zero-configuration stacking)**	2	Six 40GE/100GE QSFP28 optical ports Applicable modules and cables: • **QSFP+ optical module** • **QSFP28 optical module** • **1 m, 3 m, and 5 m QSFP+ to QSFP+ high-speed copper cables** • **10 m QSFP+ to QSFP+ AOC cable** • **1 m QSFP28 to QSFP28 high-speed copper cable** • **10 m QSFP28 to QSFP28 AOC cable** • **2 m QSFP28 dedicated stack cable (supported in V200R020C10 and later versions)**

			NOTE A QSFP28 optical port cannot be split into four 10GE ports, regardless of whether the port uses a QSFP28 or QSFP+ optical module. For the S6730-H24X6C (part number: 02352FSG/ 02352FSG-001/02352FSG-005/02352FSG-007): • By default, the license is not loaded on a switch. • In V200R013C02, QSFP28 ports are 100GE ports. • In V200R019C00 and later versions, QSFP28 ports are 40GE ports. To use the 100GE rate, you need to purchase and activate a license. • After a switch is upgraded from V200R013C02 to V200R019C00 or a later version, QSFP28 ports are still 100GE ports. You can load a license to change the port rate. • To configure QSFP28 ports as 100GE ports, load and activate this license, run the **assign port-speed 100GE** [**slot** *slot-id* | **all**] or **assign port-type 100GE** [**slot** *slot-id* | **all**] command, and restart the switch. In versions earlier than V200R020C00, the command format is **assign port-speed 100GE** [**slot** *slot-id* | **all**]. In V200R020C00 and later versions, the command format is **assign port-type 100GE** [**slot** *slot-id* | **all**]. For the S6730-H24X6C (part number: 02353GFC/ 02353GFC-001/02353GFC-003/02353GFC-004), the license has been activated and QSFP28 ports on the switch work as 100GE ports.
3	Ground screw **NOTE** It is used with a **ground cable**.	4	SSD card slot **NOTE** This slot is reserved for future use.
5	One console port	6	One ETH management port

7	One USB port	8	One PNP button **NOTICE** To restore the factory settings and reset the switch, hold down the button for at least 6 seconds. To reset the switch, press the button. Resetting the switch will cause service interruption. Exercise caution when you press the PNP button.
9	Fan module slot 1 **NOTE** Applicable fan module: **6.4 FAN-031A-B (Fan box(B,FAN panel side exhaust))**	10	Fan module slot 2 **NOTE** Applicable fan module: **6.4 FAN-031A-B (Fan box(B,FAN panel side exhaust))**
11	Fan module slot 3 **NOTE** Applicable fan module: **6.4 FAN-031A-B (Fan box(B,FAN panel side exhaust))**	12	Fan module slot 4 **NOTE** Applicable fan module: **6.4 FAN-031A-B (Fan box(B,FAN panel side exhaust))**
13	Power module slot 1 **NOTE** Applicable power module: • **5.16 PAC600S12-CB (600 W AC Power Module)** • **5.18 PAC600S12-EB (600 W AC Power Module)** • **5.17 PAC600S12-DB (600 W AC Power Module)** (applicable in V200R020C10 and later versions) • **5.19 PDC1000S12-DB (1000 W DC Power Module)**	14	Power module slot 2 **NOTE** Applicable power module: • **5.16 PAC600S12-CB (600 W AC Power Module)** • **5.18 PAC600S12-EB (600 W AC Power Module)** • **5.17 PAC600S12-DB (600 W AC Power Module)** (applicable in V200R020C10 and later versions) • **5.19 PDC1000S12-DB (1000 W DC Power Module)**

Port Description

10GE SFP+ optical port

A 10GE SFP+ Ethernet optical port supports auto-sensing to 1000 Mbit/s. It sends and receives service data at 1000 Mbit/s or 10 Gbit/s. **Table 4-188** describes the attributes of a 10GE SFP+ Ethernet optical port.

Table 4-188 Attributes of a 10GE SFP+ port

Attribute	Description
Connector type	LC/PC

Attribute	Description
Optical port attributes	Depend on the optical module used
Standards compliance	IEEE802.3ae
Working mode	GE/10GE auto-sensing

40GE/100GE QSFP28 optical port

A 40GE/100GE QSFP28 optical port sends and receives service traffic at 40 Gbit/s or 100 Gbit/s. **Table 4-189** describes the attributes of a QSFP28 optical port.

Table 4-189 Attributes of a QSFP28 optical port

Attribute	Description
Connector type	MPO/LC
Optical port attributes	Depend on the optical module used
Standards compliance	IEEE802.3ba

Console port

The console port is connected to a console for on-site configuration. The port must use a **console cable**. The console port is used when a switch is powered on for the first time. For details about the attributes of a console port, see **Table 4-190**.

Table 4-190 Attributes of a console port

Attribute	Description
Connector type	RJ45
Standards compliance	RS-232
Working mode	Duplex Universal Asynchronous Receiver/Transmitter (UART)
Baud rate	9600 bit/s, 19200 bit/s, 38400 bit/s, 57600 bit/s, or 115200 bit/s Default value: 9600 bit/s

ETH management port

You can connect a switch to a configuration terminal or network management workstation through the ETH management port to configure the switch locally or remotely. The port must use an **Ethernet cable**. You can choose to download the software package through the ETH management port in the BootLoad menu. File transfer through the ETH management port is faster than transfer through the console port. **Table 4-191** describes the attributes of an ETH management port.

Table 4-191 Attributes of an ETH management port

Attribute	Description
Connector type	RJ45
Standards compliance	IEEE802.3
Working Mode	10/100 Mbit/s auto-sensing
Maximum transmission distance	100 m

In V200R012C00 and later versions, you can log in to the switch that contains the ETH management port for the first time through the ETH port. For details, see "First Login to a Switch" in the *Configuration Guide - Basic Configuration*. If you have logged in to the switch for the first time by pressing and holding the MODE button for 6 seconds or longer and saved the configuration, the default configuration on the ETH port will be cleared. In this case, you cannot log in to the switch for the first time through the ETH port. You are advised to log in to the switch for the first time through the ETH port.

USB port

The USB port can have a USB flash drive connected to upgrade the switch, or transfer configuration files or other files. The USB port can only connect to a USB flash drive that complies with USB 2.0.

NOTE

USB flash drives from different vendors differ in model compatibility and drivers. If a USB flash drive cannot be used, try to replace it with another one from a mainstream vendor. Switches support a maximum of 128 GB USB flash drives.

Indicator Description

The S6730-H24X6C has the same types of indicators as the S6730-H48X6C. For details, see **Indicator Description**.

Power Supply Configuration

The switch can use a single power module or double power modules for 1+1 power redundancy. Pluggable AC and DC power modules can be used together in the same switch.

Heat Dissipation

The S6730-H24X6C uses pluggable fan modules for forced air cooling. Air flows in from the front side and exhausts from the rear panel.

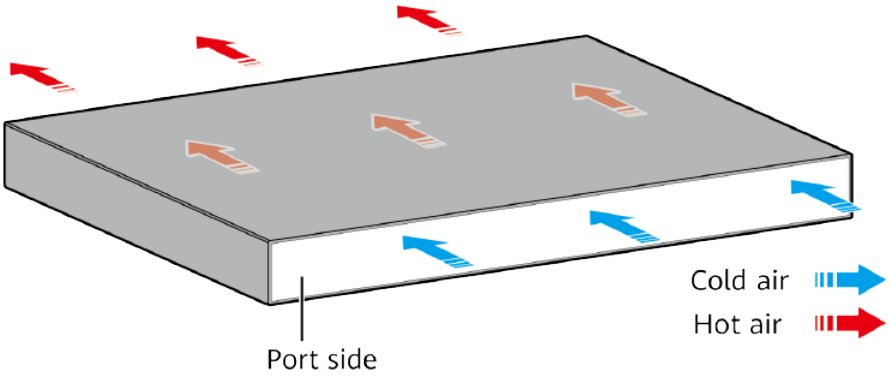

NOTE

This figure only shows the airflow direction and does not depict the actual device.

Technical Specifications

Table 4-192 lists technical specifications of the S6730-H24X6C.

Table 4-192 Technical specifications

Item	Description
Memory (RAM)	4 GB
Flash	2 GB in total. To view the available flash memory size, run the **display version** command.
Mean time between failures (MTBF)	62.27 years
Mean time to repair (MTTR)	2 hours
Availability	> 0.99999
Service port surge protection	N/A
Power supply surge protection	• Using AC power modules: ±6 kV in differential mode, ±6 kV in common mode • Using DC power modules: ±2 kV in differential mode, ±4 kV in common mode

Item	Description
Dimensions (H x W x D)	• Basic dimensions (excluding the parts protruding from the body): 43.6 mm x 442.0 mm x 420.0 mm (1.72 in. x 17.4 in. x 16.5 in.) • Maximum dimensions (the depth is the distance from ports on the front panel to the handle on the rear panel): 43.6 mm x 442.0 mm x 446.0 mm (1.72 in. x 17.4 in. x 17.6 in.)
Weight (with packaging)	8.9 kg (19.62 lb)
Stack ports	• Any 10GE SFP+ ports (a maximum of 16 physical ports) • Any 40GE/100GE QSFP28 ports (a maximum of 6 physical ports)
RTC	Supported
RPS	Not supported
PoE	Not supported
Rated voltage range	• AC input: 100 V AC to 240 V AC, 50/60 Hz • High-Voltage DC input: 240 V DC • DC input: -48 V DC to -60 V DC
Maximum voltage range	• AC input: 90 V AC to 290 V AC, 45 Hz to 65 Hz • High-Voltage DC input: 190 V DC to 290 V DC • DC input: -38.4 V DC to -72 V DC
Maximum power consumption (100% throughput, full speed of fans)	254 W
Typical power consumption (30% of traffic load, tested according to ATIS standard)	149 W
Operating temperature	-5°C to +45°C (23°F to 113°F) at an altitude of 0-1800 m (0-5906 ft.) **NOTE** When the altitude is 1800-5000 m (5906-16404 ft.), the highest operating temperature reduces by 1°C (1.8°F) every time the altitude increases by 220 m (722 ft.). The switch cannot be started when the ambient temperature is lower than 0°C (32°F). The operating temperature of the switch is -5°C to 40°C (23°F to 104°F) when it uses QSFP-100G-ER4 optical module.

Item	Description
Storage temperature	-40°C to +70°C (-40°F to +158°F)
Noise under normal temperature (27°C, sound power)	< 65 dB(A)
Relative humidity	5% to 95%, noncondensing
Operating altitude	0-5000 m (0-16404 ft.)
Certification	• EMC certification • Safety certification • Manufacturing certification
Part number	02352FSG 02352FSG-001 02352FSG-005 02352FSG-007 02353GFC 02353GFC-001 02353GFC-003 02353GFC-004

4.12.2 S6730-H48X6C (02352FSF/02352FSF-003/02352FSF-007/02352FSF-009/02352FSF-011/02353FWL/02353FWL-003/02353FWL-005/02353FWL-006)

Version Mapping

Table 4-193 lists the mapping between the S6730-H48X6C chassis and software versions.

Table 4-193 Version mapping

Series	Model	Software Version
S6730-H	S6730-H48X6C	02352FSF: V200R013C02 and later versions 02352FSF-003: V200R020C10 and later versions 02352FSF-007: V200R021C10SPC500 and later versions (If V200R021C00SPC100 is used, install V200R021SPH011 or a later patch.) 02352FSF-009: V200R021C10SPC600 and later versions (If V200R021C00SPC100 is used, install V200R021SPH013 or a later patch.) 02352FSF-011: V200R021C10SPC600 and later versions (If V200R021C00SPC100 is used, install V200R021SPH013 or a later patch.) 02352FWL: V200R013C02 and later versions 02352FWL-003: V200R020C10 and later versions 02352FWL-005: V200R021C10SPC500 and later versions (If V200R021C00SPC100 is used, install V200R021SPH011 or a later patch.) 02353FWL-006: V200R021C10SPC600 and later versions (If V200R021C00SPC100 is used, install V200R021SPH013 or a later patch.) **NOTE** V200R021C01 is not supported.

Appearance and Structure

Figure 4-83 S6730-H48X6C appearance

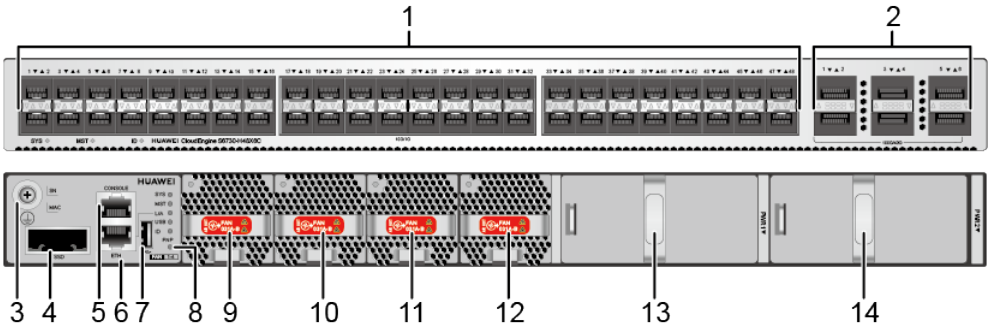

1	Forty-eight 10GE SFP+ ports Applicable modules and cables: • **GE optical module** • **GE-CWDM optical module** • **GE-DWDM optical module** • **GE copper module** • **10GE SFP+ optical module (OSXD22N00 not supported)** • **10GE-CWDM optical module** • **10GE-DWDM optical module** • **1 m, 3 m, 5 m, and 10 m SFP+ high-speed copper cables** • **3 m and 10 m SFP+ AOC cables** • **0.5 m and 1.5 m SFP+ dedicated stack cables (supported by the last 16 SFP+ ports and used only for zero-configuration stacking)**	2	Six 40GE/100GE QSFP28 optical ports Applicable modules and cables: • **QSFP+ optical module** • **QSFP28 optical module** • **1 m, 3 m, and 5 m QSFP+ to QSFP+ high-speed copper cables** • **10 m QSFP+ to QSFP+ AOC cable** • **1 m QSFP28 to QSFP28 high-speed copper cable** • **10 m QSFP28 to QSFP28 AOC cable** • **2 m QSFP28 dedicated stack cable (supported in V200R020C10 and later versions)**

			NOTE A QSFP28 optical port cannot be split into four 10GE ports, regardless of whether the port uses a QSFP28 or QSFP+ optical module. For the S6730-H48X6C (part number: 02352FSF/ 02352FSF-003/02352FSF-007/02352FSF -009/02352FSF-011): • By default, the license is not loaded on a switch. • In V200R013C02, QSFP28 ports are 100GE ports. • In V200R019C00 and later versions, QSFP28 ports are 40GE ports. To use the 100GE rate, you need to purchase and activate a license. • After a switch is upgraded from V200R013C02 to V200R019C00 or a later version, QSFP28 ports are still 100GE ports. You can load a license to change the port rate. • To configure QSFP28 ports as 100GE ports, load and activate this license, run the **assign port-speed 100GE** [**slot** *slot-id* | **all**] or **assign port-type 100GE** [**slot** *slot-id* | **all**] command, and restart the switch. In versions earlier than V200R020C00, the command format is **assign port-speed 100GE** [**slot** *slot-id* | **all**]. In V200R020C00 and later versions, the command format is **assign port-type 100GE** [**slot** *slot-id* | **all**]. For the S6730-H48X6C (part number: 02353FWL/ 02353FWL-003/02353FWL-005/02353F WL-006), the license has been activated and QSFP28 ports on these switches work as 100GE ports.
3	Ground screw **NOTE** It is used with a **ground cable**.	4	SSD card slot **NOTE** This slot is reserved for future use.
5	One console port	6	One ETH management port

7	One USB port	8	One PNP button **NOTICE** To restore the factory settings and reset the switch, hold down the button for at least 6 seconds. To reset the switch, press the button. Resetting the switch will cause service interruption. Exercise caution when you press the PNP button.
9	Fan module slot 1 **NOTE** Applicable fan module: **6.4 FAN-031A-B (Fan box(B,FAN panel side exhaust))**	10	Fan module slot 2 **NOTE** Applicable fan module: **6.4 FAN-031A-B (Fan box(B,FAN panel side exhaust))**
11	Fan module slot 3 **NOTE** Applicable fan module: **6.4 FAN-031A-B (Fan box(B,FAN panel side exhaust))**	12	Fan module slot 4 **NOTE** Applicable fan module: **6.4 FAN-031A-B (Fan box(B,FAN panel side exhaust))**
13	Power module slot 1 **NOTE** Applicable power module: • **5.16 PAC600S12-CB (600 W AC Power Module)** • **5.18 PAC600S12-EB (600 W AC Power Module)** • **5.17 PAC600S12-DB (600 W AC Power Module)** (applicable in V200R020C10 and later versions) • **5.19 PDC1000S12-DB (1000 W DC Power Module)**	14	Power module slot 2 **NOTE** Applicable power module: • **5.16 PAC600S12-CB (600 W AC Power Module)** • **5.18 PAC600S12-EB (600 W AC Power Module)** • **5.17 PAC600S12-DB (600 W AC Power Module)** (applicable in V200R020C10 and later versions) • **5.19 PDC1000S12-DB (1000 W DC Power Module)**

Port Description

10GE SFP+ optical port

A 10GE SFP+ Ethernet optical port supports auto-sensing to 1000 Mbit/s. It sends and receives service data at 1000 Mbit/s or 10 Gbit/s. **Table 4-194** describes the attributes of a 10GE SFP+ Ethernet optical port.

Table 4-194 Attributes of a 10GE SFP+ port

Attribute	Description
Connector type	LC/PC

Attribute	Description
Optical port attributes	Depend on the optical module used
Standards compliance	IEEE802.3ae
Working mode	GE/10GE auto-sensing

40GE/100GE QSFP28 optical port

A 40GE/100GE QSFP28 optical port sends and receives service traffic at 40 Gbit/s or 100 Gbit/s. **Table 4-195** describes the attributes of a QSFP28 optical port.

Table 4-195 Attributes of a QSFP28 optical port

Attribute	Description
Connector type	MPO/LC
Optical port attributes	Depend on the optical module used
Standards compliance	IEEE802.3ba

Console port

The console port is connected to a console for on-site configuration. The port must use a **console cable**. The console port is used when a switch is powered on for the first time. For details about the attributes of a console port, see **Table 4-196**.

Table 4-196 Attributes of a console port

Attribute	Description
Connector type	RJ45
Standards compliance	RS-232
Working mode	Duplex Universal Asynchronous Receiver/Transmitter (UART)
Baud rate	9600 bit/s, 19200 bit/s, 38400 bit/s, 57600 bit/s, or 115200 bit/s Default value: 9600 bit/s

ETH management port

You can connect a switch to a configuration terminal or network management workstation through the ETH management port to configure the switch locally or remotely. The port must use an **Ethernet cable**. You can choose to download the software package through the ETH management port in the BootLoad menu. File transfer through the ETH management port is faster than transfer through the console port. **Table 4-197** describes the attributes of an ETH management port.

Table 4-197 Attributes of an ETH management port

Attribute	Description
Connector type	RJ45
Standards compliance	IEEE802.3
Working Mode	10/100 Mbit/s auto-sensing
Maximum transmission distance	100 m

In V200R012C00 and later versions, you can log in to the switch that contains the ETH management port for the first time through the ETH port. For details, see "First Login to a Switch" in the *Configuration Guide - Basic Configuration*. If you have logged in to the switch for the first time by pressing and holding the MODE button for 6 seconds or longer and saved the configuration, the default configuration on the ETH port will be cleared. In this case, you cannot log in to the switch for the first time through the ETH port. You are advised to log in to the switch for the first time through the ETH port.

USB port

The USB port can have a USB flash drive connected to upgrade the switch, or transfer configuration files or other files. The USB port can only connect to a USB flash drive that complies with USB 2.0.

NOTE

USB flash drives from different vendors differ in model compatibility and drivers. If a USB flash drive cannot be used, try to replace it with another one from a mainstream vendor. Switches support a maximum of 128 GB USB flash drives.

Indicator Description

Figure 4-84 Indicators on the S6730-H48X6C

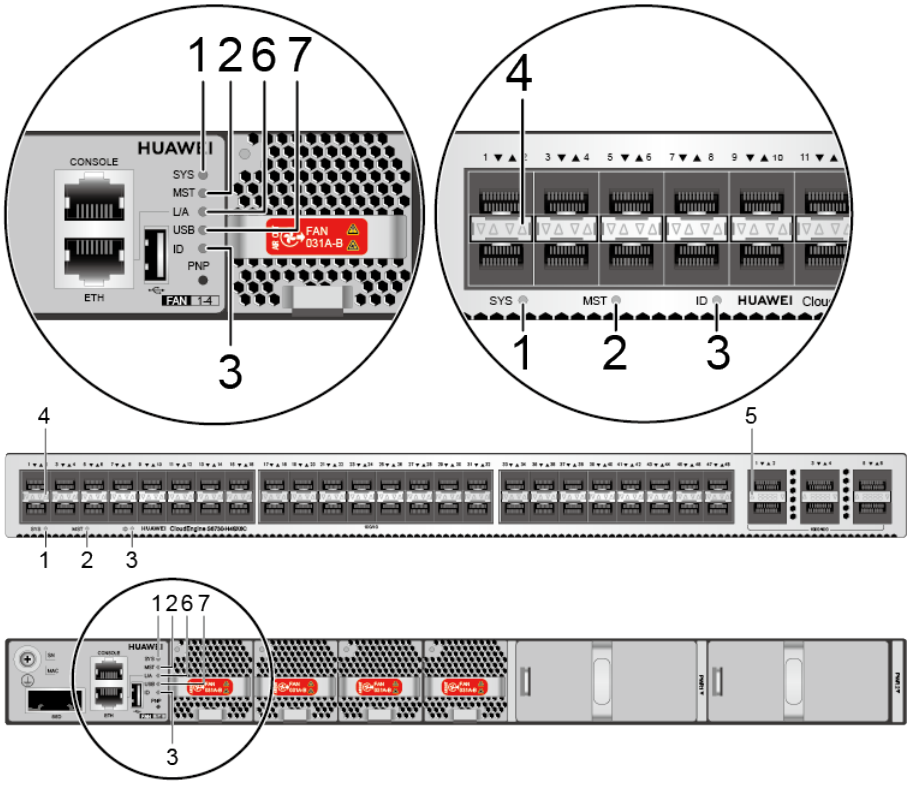

Table 4-198 Description of indicators on the switch

No.	Indicator	Name	Color	Status	Description
1	SYS	System status indicator	-	Off	The system is not running.
			Green	Fast blinking	The system is starting.
			Green	Steady on	During the system startup preparation phase, the SYS indicator is steady green, which lasts for a maximum of 30 seconds.
			Green	Slow blinking	The system is running normally.
			Red	Steady on	The system does not work normally after registration, or a fan alarm or a temperature alarm has been generated.

No.	Indicator	Name	Color	Status	Description
2	MST	Stack indicator	-	Off	The switch is not the master switch in a stack.
			Green	Blinking	The switch is the master switch in a stack or a standalone switch.
3	ID	ID indicator	-	Off	The ID indicator is not used (default state).
			Blue	Steady on	The indicator identifies the switch to maintain. The ID indicator can be turned on or off remotely to help field engineers find the switch to maintain.
4	-	Service port indicator (10GE optical port)	Green	Off	The port is not connected or has been shut down.
				Steady on	A link has been established on the port.
			Yellow	Off	The port is not sending or receiving data.
				Blinking	The port is sending or receiving data.
5	-	Service port indicator (40GE/100GE optical port)	-	Off	The port is not connected or has been shut down.
			Green	Steady on	A link has been established on the port.
				Blinking	The port is sending or receiving data.
6	L/A	ETH port indicator	-	Off	The ETH port is not connected.
			Green	Steady on	The ETH port is connected.
			Green	Blinking	The Eth port is sending or receiving data.

No.	Indicator	Name	Color	Status	Description
7	USB	USB-based deployment indicator	-	Off	• No USB flash drive is connected to the switch. • The USB port is damaged. • The indicator is damaged. • The USB flash drive does not have any configuration file and cannot be used for deployment. • The switch has been upgraded using the USB flash drive and is restarting.
			Green	Steady on	A USB-based deployment has been completed.
			Green	Blinking	The system is reading data from a USB flash drive.
			Yellow	Steady on	The switch has copied all the required files and completed the file check. The USB flash drive can be removed from the switch.
			Red	Blinking	An error has occurred when the system is executing the configuration file or reading data from the USB flash drive.

Power Supply Configuration

The switch can use a single power module or double power modules for 1+1 power redundancy. Pluggable AC and DC power modules can be used together in the same switch.

Heat Dissipation

The S6730-H48X6C uses pluggable fan modules for forced air cooling. Air flows in from the front side and exhausts from the rear panel.

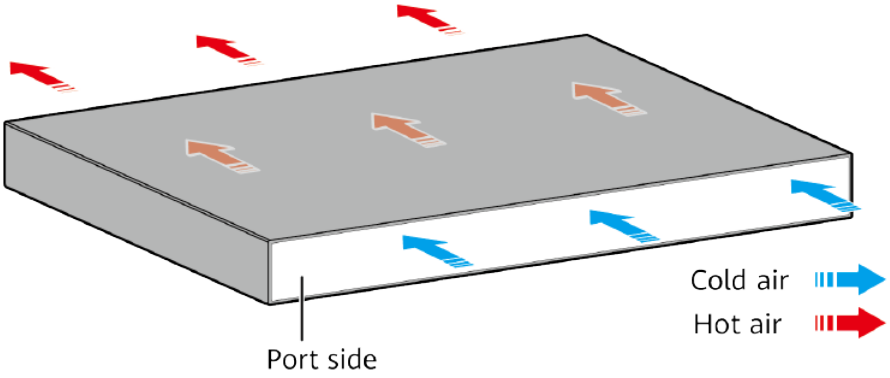

NOTE

This figure only shows the airflow direction and does not depict the actual device.

Technical Specifications

Table 4-199 lists technical specifications of the S6730-H48X6C.

Table 4-199 Technical specifications

Item	Description
Memory (RAM)	4 GB
Flash	2 GB in total. To view the available flash memory size, run the **display version** command.
Mean time between failures (MTBF)	56.87 years
Mean time to repair (MTTR)	2 hours
Availability	> 0.99999
Service port surge protection	N/A
Power supply surge protection	• Using AC power modules: ±6 kV in differential mode, ±6 kV in common mode • Using DC power modules: ±2 kV in differential mode, ±4 kV in common mode
Dimensions (H x W x D)	• Basic dimensions (excluding the parts protruding from the body): 43.6 mm x 442.0 mm x 420.0 mm (1.72 in. x 17.4 in. x 16.5 in.) • Maximum dimensions (the depth is the distance from ports on the front panel to the handle on the rear panel): 43.6 mm x 442.0 mm x 446.0 mm (1.72 in. x 17.4 in. x 17.6 in.)
Weight (with packaging)	9.2 kg (20.28 lb)
Stack ports	• Any 10GE SFP+ ports (a maximum of 16 physical ports) • Any 40GE/100GE QSFP28 ports (a maximum of 6 physical ports)
RTC	Supported
RPS	Not supported
PoE	Not supported

Item	Description
Rated voltage range	• AC input: 100 V AC to 240 V AC, 50/60 Hz • High-Voltage DC input: 240 V DC • DC input: -48 V DC to -60 V DC
Maximum voltage range	• AC input: 90 V AC to 290 V AC, 45 Hz to 65 Hz • High-Voltage DC input: 190 V DC to 290 V DC • DC input: -38.4 V DC to -72 V DC
Maximum power consumption (100% throughput, full speed of fans)	291 W
Typical power consumption (30% of traffic load, tested according to ATIS standard)	165 W
Operating temperature	-5°C to +45°C (23°F to 113°F) at an altitude of 0-1800 m (0-5906 ft.) **NOTE** When the altitude is 1800-5000 m (5906-16404 ft.), the highest operating temperature reduces by 1°C (1.8°F) every time the altitude increases by 220 m (722 ft.). The switch cannot be started when the ambient temperature is lower than 0°C (32°F). The operating temperature of the switch is -5°C to 40°C (23°F to 104°F) when it uses QSFP-100G-ER4 optical module.
Storage temperature	-40°C to +70°C (-40°F to +158°F)
Noise under normal temperature (27°C, sound power)	< 65 dB(A)
Relative humidity	5% to 95%, noncondensing
Operating altitude	0-5000 m (0-16404 ft.)
Certification	• EMC certification • Safety certification • Manufacturing certification

Item	Description
Part number	02352FSF 02352FSF-003 02352FSF-007 02352FSF-009 02352FSF-011 02353FWL 02353FWL-003 02353FWL-005 02353FWL-006

4.12.3 S6730-H24X4Y4C (02353NRD)

Overview

Table 4-200 Basic information about the S6730-H24X4Y4C

Item	Details
Description	S6730-H24X4Y4C (24*10GE SFP+ ports, 4*25GE SFP28 ports, 4*100GE QSFP28 ports, without power module)
Part Number	02353NRD
Model	S6730-H24X4Y4C
First supported version	V200R020C00

Components

Figure 4-85 S6730-H24X4Y4C appearance

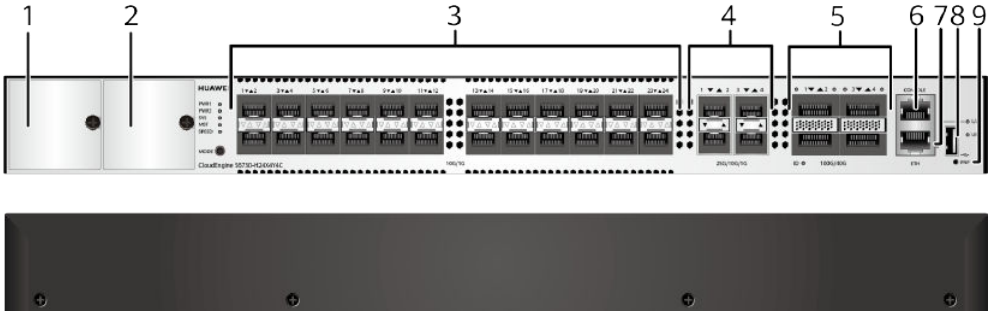

1	Power module slot 1 **NOTE** Applicable power module: • **5.11 PDC260S12-DL (260 W DC Power Module)** • **5.12 PAC300S12-CL (300 W AC Power Module)**	2	Power module slot 2 **NOTE** Applicable power module: • **5.11 PDC260S12-DL (260 W DC Power Module)** • **5.12 PAC300S12-CL (300 W AC Power Module)**
3	Twenty-four 10GE SFP+ ports **NOTE** In V200R021C00 and later versions, a RTU license can be loaded to increase the port rate to 25 Gbit/s.	4	Four 1GE/10GE/25GE SFP28 optical ports
5	Four 40GE/100GE QSFP28 optical ports	6	One console port
7	One ETH management port	8	One USB port
9	One PNP button **NOTICE** To restore the factory settings and reset the switch, hold down the button for at least 6 seconds. To reset the switch, press the button. Resetting the switch will cause service interruption. Exercise caution when you press the PNP button.	-	Ground screw **NOTE** The ground screw is on the left side of the chassis.

Ports

Table 4-201 Ports on the S6730-H24X4Y4C

Port	Connector Type	Description	Available Components
10GE SFP+ optical port	SFP+	A 10GE SFP+ Ethernet optical port supports auto-sensing to 1000 Mbit/s. It sends and receives service data at 1000 Mbit/s or 10 Gbit/s. In V200R021C00 and later versions, a RTU license can be loaded to increase the port rate to 25 Gbit/s.	• **GE eSFP optical modules** • **GE-CWDM eSFP optical modules** • **GE-DWDM eSFP optical modules** • **GE SFP copper module** • **10GE SFP+ optical modules (OSXD22N00 and SFP-10G-ZR not supported)** • **1 m, 2 m, 3 m, 5 m, and 10 m SFP+ high-speed copper cables** • **3 m and 10 m SFP+ AOC cables** • **0.5 m and 1.5 m SFP+ dedicated stack cables (supported by the last 16 SFP+ ports and used only for zero-configuration stacking)** • **25GE SFP28 optical modules (need a license loaded)**

Port	Connector Type	Description	Available Components
			• 1 m SFP28 high-speed copper cable (need a license loaded) • 3 m, 5 m, 7 m, and 10 m SFP28 AOC cables (need a license loaded)

Port	Connector Type	Description	Available Components
1GE/10GE/25GE SFP28 optical port	SFP28	A 1GE/10GE/25GE SFP28 optical port sends and receives service data at 1 Gbit/s, 10 Gbit/s, or 25 Gbit/s. When a 25GE optical module is connected to a port, the port can automatically adjust its rate to 25 Gbit/s. When a 10GE optical module is connected to a port, the port can automatically adjust its rate to 10 Gbit/s. Before installing a GE optical module on a port, run the port mode ge command to configure the port to work at 1 Gbit/s.	• **GE eSFP optical modules** • **GE-CWDM eSFP optical modules** • **GE-DWDM eSFP optical modules** • **GE SFP copper module** • **10GE SFP+ optical modules (OSXD22N00 and SFP-10G-ZR not supported)** • **25GE SFP28 optical modules** • **1 m, 2 m, 3 m, 5 m, and 10 m SFP+ high-speed copper cables** • **3 m and 10 m SFP+ AOC cables** • **1 m SFP28 high-speed copper cable** • **3 m, 5 m, 7 m, and 10 m SFP28 AOC cables**

Port	Connector Type	Description	Available Components
40GE/100GE QSFP28 optical port	QSFP28	A 40GE/100GE QSFP28 optical port sends and receives service traffic at 40 Gbit/s or 100 Gbit/s. A QSFP28 optical port cannot be split into four 10GE ports, regardless of whether the port uses a QSFP28 or QSFP+ optical module.	• **40GE QSFP+ optical modules** • **100GE QSFP28 optical modules** • **1 m, 3 m, and 5 m QSFP+ to QSFP+ high-speed copper cables** • **10 m QSFP+ to QSFP+ AOC cable** • **1 m QSFP28 to QSFP28 high-speed copper cable** • **10 m QSFP28 to QSFP28 AOC cable** • **2 m QSFP28 dedicated stack cable (supported in V200R020C10 and later versions)**
Console port	RJ45	The console port is connected to a console for on-site configuration.	**Console cable**

Port	Connector Type	Description	Available Components
ETH management port	RJ45	You can connect a switch to a configuration terminal or network management workstation through the ETH management port to configure the switch locally or remotely. You can choose to download the software package through the ETH management port in the BootLoad menu. File transfer through the ETH management port is faster than transfer through the console port.	**Ethernet cable**

Port	Connector Type	Description	Available Components
USB port	USB 2.0 Type A	The USB port can have a USB flash drive connected to upgrade the switch, or transfer configuration files or other files. The USB port can only connect to a USB flash drive that complies with USB 2.0. USB flash drives from different vendors differ in model compatibility and drivers. If a USB flash drive cannot be used, try to replace it with another one from a mainstream vendor. Switches support a maximum of 128 GB USB flash drives.	USB flash drive

Indicators and Buttons

Figure 4-86 Indicators on the S6730-H24X4Y4C

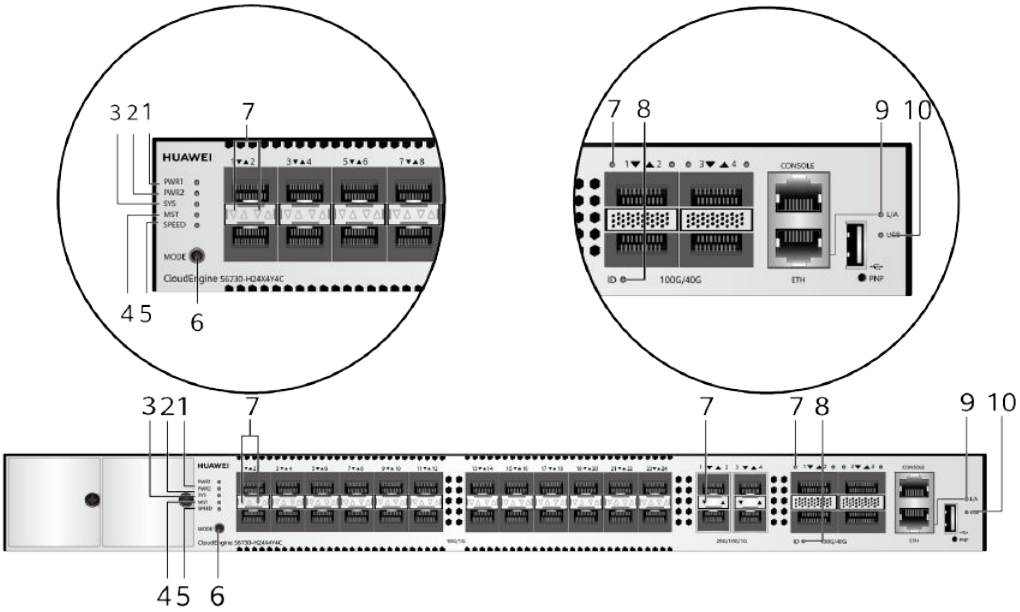

Table 4-202 Description of indicators on the switch

No.	Indicator	Name	Color	Status	Description
1	PWR 1	Power module indicator	-	Off	No power module is available in power module slot 1, or the switch has only one power module but the power module does not work normally.
			Green	Steady on	A power module is installed in power module slot 1 and is working normally.
			Yellow	Steady on	The switch has two power modules installed. Any of the following situations occurs in power module slot 1: ● A power module is available in this slot but it is not connected to a power source. ● The power module in this slot has failed.
2	PWR 2	Power module indicator	-	Off	No power module is available in power module slot 2, or the switch has only one power module but the power module does not work normally.

No.	Indicator	Name	Color	Status	Description
			Green	Steady on	A power module is installed in power module slot 2 and is working normally.
			Yellow	Steady on	The switch has two power modules installed. Any of the following situations occurs in power module slot 2: ● A power module is available in this slot but it is not connected to a power source. ● The power module in this slot has failed.
3	SYS	System status indicator	-	Off	The system is not running.
			Green	Fast blinking	The system is starting.
			Green	Steady on	During the system startup preparation phase, the SYS indicator is steady green, which lasts for a maximum of 30 seconds.
			Green	Slow blinking	The system is running normally.
			Red	Steady on	The system does not work normally after registration, or a fan alarm or a temperature alarm has been generated.
4	MST	Stack indicator	-	Off	● If you are not changing the indicator mode (default): The switch is a standby or slave switch in a stack or the stacking function is not enabled on the switch. ● If you are changing the indicator mode: The stack mode is not selected.
			Green	Steady on	The stack mode is selected. The switch is a standby or slave switch in a stack, and the service port indicators show the stack ID of the switch.

No.	Indicator	Name	Color	Status	Description
			Green	Blinking	● If you are not changing the indicator mode (default): The switch is the master switch in a stack or a standalone switch with the stacking function enabled. ● If you are changing the indicator mode: The stack mode is selected. The switch is the master switch in a stack or a standalone switch, and the service port indicators show the stack ID of the master switch. After 45 seconds, the service port indicators automatically restore to the status mode.
5	SPEED	Speed indicator	-	Off	The speed mode is not selected.
			Green	Steady on	The speed mode is selected, and service port indicators show the speed of each port.

No.	Indicator	Name	Color	Status	Description
6	MODE	Mode switch button	-	-	● When you press this button once, the service port indicators change to the stack mode and show the stack ID of the local switch. ● When you press this button a second time, the service port indicators change to the speed mode and show the speed of each service port. ● When you press this button a third time, the service port indicators restore to the default mode and show the connection status and link activity of each service port. If you do not press the MODE button within 45 seconds, the service port indicators restore to the default mode. In this case, the SPEED indicator is off. **NOTE** Hold down the mode switch button for 6s and release it to start the web initial login mode. Either of the following situations will occur: ● If the switch has no configuration file, the system attempts to enter the web initial login mode. In this mode, the status of mode indicators is as follows: ● If the system enters the web initial login mode successfully, all mode indicators turn green and stay on for a maximum of 10 minutes. ● If the system fails to enter the initial login mode, all mode indicators fast blink for 10 seconds and then restore the default status. ● If the switch has a configuration file, the system cannot enter the web initial login mode. In this case, all mode indicators fast blink for 10s, and then return to the default states.
7	ID	ID indicator	-	Off	The ID indicator is not used (default state).
			Blue	Steady on	The indicator identifies the switch to maintain. The ID indicator can be turned on or off remotely to help field engineers find the switch to maintain.

No.	Indicator	Name	Color	Status	Description
8	-	Service port indicator	Meanings of service port indicators vary in different modes. For details, see **Table 4-203** and **Table 4-204**.		
9	L/A	ETH port indicator	-	Off	The ETH port is not connected.
			Green	Steady on	The ETH port is connected.
			Green	Blinking	The ETH port is sending or receiving data.
10	USB	USB-based deployment indicator	-	Off	• No USB flash drive is connected to the switch. • The USB port is damaged. • The indicator is damaged. • The USB flash drive does not have any configuration file and cannot be used for deployment. • The switch has been upgraded using the USB flash drive and is restarting.
			Green	Steady on	A USB-based deployment has been completed.
			Green	Blinking	The system is reading data from a USB flash drive.
			Yellow	Steady on	The switch has copied all the required files and completed the file check. The USB flash drive can be removed from the switch.
			Red	Blinking	An error has occurred when the system is executing the configuration file or reading data from the USB flash drive.

Table 4-203 Description of service port indicators in different modes (two indicators for each port)

Display Mode	Color	Status	Description
Default mode	-	Off	The port is not connected or has been shut down.
	Green	Steady on	A link has been established on the port.

Display Mode	Color	Status	Description
	Yellow	Blinking	The port is sending or receiving data.
MST stack mode	-	Off	Port indicators do not show the stack ID of the switch.
	Green and yellow	Steady on	The switch is not the master switch in a stack. ● If the indicator of a port is steady on, the number of this port is the stack ID of the switch. ● If the indicators of ports 1 to 9 are steady on, the stack ID of the switch is 0.
	Green and yellow	Blinking	The switch is the master switch in a stack. ● If the indicator of a port is blinking, the number of this port is the stack ID of the switch. ● If the indicators of ports 1 to 9 are blinking, the stack ID of the switch is 0.
Speed mode	-	Off	The port is not connected or has been shut down.
	Green and yellow	Steady on	● GE/10GE SFP+ port: The port is operating at 1 Gbit/s. ● 1GE/10GE/25GE SFP28 port: The port is operating at 1 Gbit/s or 10 Gbit/s.
	Green and yellow	Blinking	● GE/10GE SFP+ port: The port is operating at 10 Gbit/s. ● 1GE/10GE/25GE SFP28 port: The port is operating at 25 Gbit/s.

Table 4-204 Description of service port indicators in different modes (one indicator for each port)

Display Mode	Color	Status	Description
Default mode	-	Off	The port is not connected or has been shut down.

Display Mode	Color	Status	Description
	Green	Steady on	A link has been established on the port.
	Green	Blinking	The port is sending or receiving data.
Speed mode	-	Off	The port is not connected or has been shut down.
	Green	Steady on	• 1GE/10GE/25GE SFP28 port: The port is operating at 1 Gbit/s or 10 Gbit/s. • 40GE/100GE QSFP28 port: The port is operating at 40 Gbit/s.
	Green	Blinking	• 1GE/10GE/25GE SFP28 port: The port is operating at 25 Gbit/s. • 40GE/100GE QSFP28 port: The port is operating at 100 Gbit/s.

Power Supply System

The switch can use a single power module or double power modules for 1+1 power redundancy. Pluggable AC and DC power modules can be used together in the same switch.

Heat Dissipation System

The switch has three built-in fans for forced air cooling. Air flows in from the left side and front panel, and exhausts from the right side.

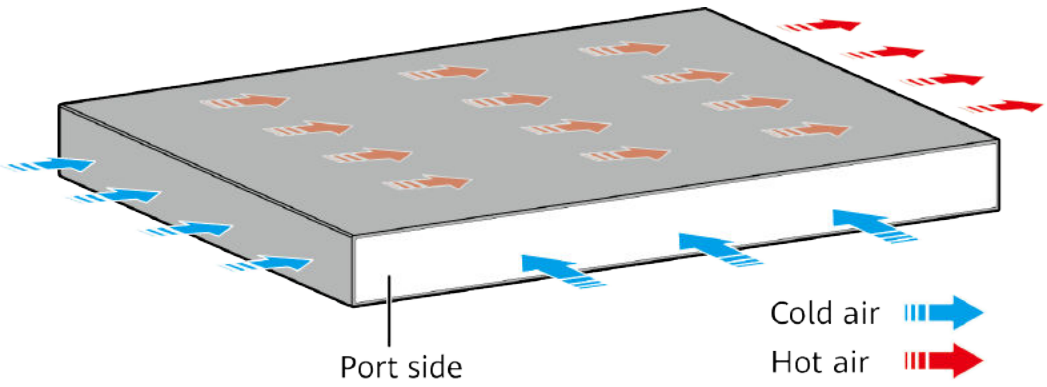

NOTE

This figure only shows the airflow direction and does not depict the actual device.

Technical Specifications

Table 4-205 Technical specifications of the S6730-H24X4Y4C

Item	Specification
Dimensions without packaging (H x W x D) [mm(in.)]	Basic dimensions (excluding the parts protruding from the body): 43.6 mm x 442.0 mm x 220.0 mm (1.72 in. x 17.4 in. x 8.66 in.) Maximum dimensions (the depth is the distance from ports on the front panel to the parts protruding from the rear panel): 43.6 mm x 442.0 mm x 231.0 mm (1.72 in. x 17.40 in. x 9.09 in.)
Dimensions with packaging (H x W x D) [mm(in.)]	115 mm × 545 mm × 360 mm (4.53 in. x 21.46 in. x 14.17 in.)
Chassis height [U]	1 U
Weight without packaging [kg(lb)]	3.4 kg (7.5 lb)
Weight with packaging [kg(lb)]	4.65 kg (10.25 lb)
Typical power consumption [W]	186 W
Typical heat dissipation [BTU/hour]	634.65 BTU/hour
Maximum power consumption [W]	253 W
Maximum heat dissipation [BTU/hour]	863.26 BTU/hour
MTBF [year]	54.68 year
MTTR [hour]	2 hour
Availability	>0.99999
Noise at normal temperature (acoustic power) [dB(A)]	64.5 dB(A)
Noise at normal temperature (acoustic pressure) [dB(A)]	51.7 dB(A)
Number of card slots	0
Number of power slots	2
Number of fans modules	3
Redundant power supply	1+1 Pluggable AC and DC power modules can be used together in the same switch.

Item	Specification
Long-term operating temperature [°C(°F)]	-5°C to +45°C (23°F to 113°F) at an altitude of 0-1800 m (0-5906 ft.)
Short-term operating temperature [°C(°F)]	Not supported
Restriction on the operating temperature variation rate [°C(°F)]	When the altitude is 1800–5000 m (5906–16404 ft.), the highest operating temperature reduces by 1°C (1.8°F) every time the altitude increases by 220 m (722 ft.). Devices cannot start when the temperature is lower than 0°C (32°F). When the QSFP-100G-ER4 optical module is used, the operating temperature ranges from -5°C to +40°C (23°F to 104°F).
Storage temperature [°C(°F)]	-40°C to +70°C (-40°F to +158°F)
Long-term operating relative humidity [RH]	5% to 95%, noncondensing
Long-term operating altitude [m(ft.)]	0-5000 m (0-16404 ft.)
Storage altitude [m(ft.)]	0-5000 m (0-16404 ft.)
Power supply mode	Pluggable power supply
Rated input voltage [V]	• AC input: 100 V AC to 240 V AC; 50/60 Hz • High-voltage DC input: 240 V DC • DC input: –48 V DC to –60 V DC
Input voltage range [V]	• AC input: 90–290 V AC; 45–65 Hz • High-voltage DC input: 190 V DC to 290 V DC • DC input: -38.4 V DC to -72 V DC
Maximum input current [A]	The current specifications depend on the pluggable power modules in use. For details, see the related power module specifications.
Memory	4 GB
Flash memory	2 GB in total. To view the available flash memory size, run the display version command.
Console port	RJ45
Eth Management port	RJ45

Item	Specification
USB	Supported
RTC	Supported
RPS input	Not supported
Service port surge protection [kV]	-
Power supply surge protection [kV]	• AC power module configured: ±6 kV in differential mode, ±6 kV in common mode • DC power module configured: ±2 kV in differential mode, ±4 kV in common mode
Types of fans	Built-in
Heat dissipation mode	Heat dissipation with fan, intelligent fan speed adjustment
Airflow direction	Air flows in from the left side and front panel, and exhausts from the right side.
PoE	Not supported
Certification	EMC certification Safety certification Manufacturing certification

4.12.4 S6730-H24X4Y4C (02353NRD-002)

Overview

Table 4-206 Basic information about the S6730-H24X4Y4C

Item	Details
Description	S6730-H24X4Y4C (24*10GE SFP+ ports, 4*25GE SFP28 ports, 4*100GE QSFP28 ports, without power module)
Part Number	02353NRD-002
Model	S6730-H24X4Y4C
First supported version	V200R021C10SPC500

Item	Details
Remarks	If the device is used in V200R021C00SPC100, install V200R021SPH011 or a later patch.

Components

Figure 4-87 S6730-H24X4Y4C appearance

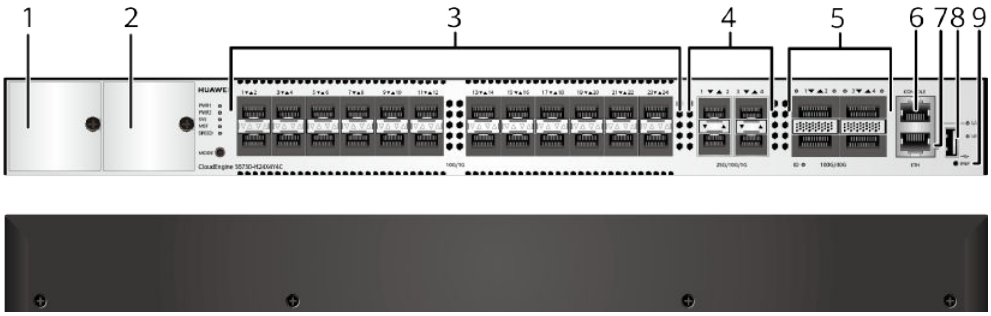

1	Power module slot 1 **NOTE** Applicable power module: • **5.11 PDC260S12-DL (260 W DC Power Module)** • **5.12 PAC300S12-CL (300 W AC Power Module)**	2	Power module slot 2 **NOTE** Applicable power module: • **5.11 PDC260S12-DL (260 W DC Power Module)** • **5.12 PAC300S12-CL (300 W AC Power Module)**
3	Twenty-four 10GE SFP+ ports **NOTE** In V200R021C00 and later versions, a RTU license can be loaded to increase the port rate to 25 Gbit/s.	4	Four 1GE/10GE/25GE SFP28 optical ports
5	Four 40GE/100GE QSFP28 optical ports	6	One console port
7	One ETH management port	8	One USB port

9	One PNP button **NOTICE** To restore the factory settings and reset the switch, hold down the button for at least 6 seconds. To reset the switch, press the button. Resetting the switch will cause service interruption. Exercise caution when you press the PNP button.	-	Ground screw **NOTE** The ground screw is on the left side of the chassis.

Ports

Table 4-207 Ports on the S6730-H24X4Y4C

Port	Connector Type	Description	Available Components
10GE SFP+ optical port	SFP+	A 10GE SFP+ Ethernet optical port supports auto-sensing to 1000 Mbit/s. It sends and receives service data at 1000 Mbit/s or 10 Gbit/s. A RTU license can be loaded to increase the port rate to 25 Gbit/s.	• **GE eSFP optical modules** • **GE-CWDM eSFP optical modules** • **GE-DWDM eSFP optical modules** • **GE SFP copper module** • **10GE SFP+ optical modules (OSXD22N00 and SFP-10G-ZR not supported)** • **1 m, 2 m, 3 m, 5 m, and 10 m SFP+ high-speed copper cables** • **3 m and 10 m SFP+ AOC cables** • **0.5 m and 1.5 m SFP+ dedicated stack cables (supported by the last 16 SFP+ ports and used only for zero-configuration stacking)** • **25GE SFP28 optical modules (need a license loaded)**

Port	Connector Type	Description	Available Components
			• 1 m SFP28 high-speed copper cable (need a license loaded) • 3 m, 5 m, 7 m, and 10 m SFP28 AOC cables (need a license loaded)

Port	Connector Type	Description	Available Components
1GE/10GE/25GE SFP28 optical port	SFP28	A 1GE/10GE/25GE SFP28 optical port sends and receives service data at 1 Gbit/s, 10 Gbit/s, or 25 Gbit/s. When a 25GE optical module is connected to a port, the port can automatically adjust its rate to 25 Gbit/s. When a 10GE optical module is connected to a port, the port can automatically adjust its rate to 10 Gbit/s. Before installing a GE optical module on a port, run the port mode ge command to configure the port to work at 1 Gbit/s.	• **GE eSFP optical modules** • **GE-CWDM eSFP optical modules** • **GE-DWDM eSFP optical modules** • **GE SFP copper module** • **10GE SFP+ optical modules (OSXD22N00 and SFP-10G-ZR not supported)** • **25GE SFP28 optical modules** • **1 m, 2 m, 3 m, 5 m, and 10 m SFP+ high-speed copper cables** • **3 m and 10 m SFP+ AOC cables** • **1 m SFP28 high-speed copper cable** • **3 m, 5 m, 7 m, and 10 m SFP28 AOC cables**

Port	Connector Type	Description	Available Components
40GE/100GE QSFP28 optical port	QSFP28	A 40GE/100GE QSFP28 optical port sends and receives service traffic at 40 Gbit/s or 100 Gbit/s. A QSFP28 optical port cannot be split into four 10GE ports, regardless of whether the port uses a QSFP28 or QSFP+ optical module.	• **40GE QSFP+ optical modules** • **100GE QSFP28 optical modules** • **1 m, 3 m, and 5 m QSFP+ to QSFP+ high-speed copper cables** • **10 m QSFP+ to QSFP+ AOC cable** • **1 m QSFP28 to QSFP28 high-speed copper cable** • **10 m QSFP28 to QSFP28 AOC cable** • **2 m QSFP28 dedicated stack cable**
Console port	RJ45	The console port is connected to a console for on-site configuration.	**Console cable**

Port	Connector Type	Description	Available Components
ETH management port	RJ45	You can connect a switch to a configuration terminal or network management workstation through the ETH management port to configure the switch locally or remotely. You can choose to download the software package through the ETH management port in the BootLoad menu. File transfer through the ETH management port is faster than transfer through the console port.	**Ethernet cable**

Port	Connector Type	Description	Available Components
USB port	USB 2.0 Type A	The USB port can have a USB flash drive connected to upgrade the switch, or transfer configuration files or other files. The USB port can only connect to a USB flash drive that complies with USB 2.0. USB flash drives from different vendors differ in model compatibility and drivers. If a USB flash drive cannot be used, try to replace it with another one from a mainstream vendor. Switches support a maximum of 128 GB USB flash drives.	USB flash drive

Indicators and Buttons

Figure 4-88 Indicators on the S6730-H24X4Y4C

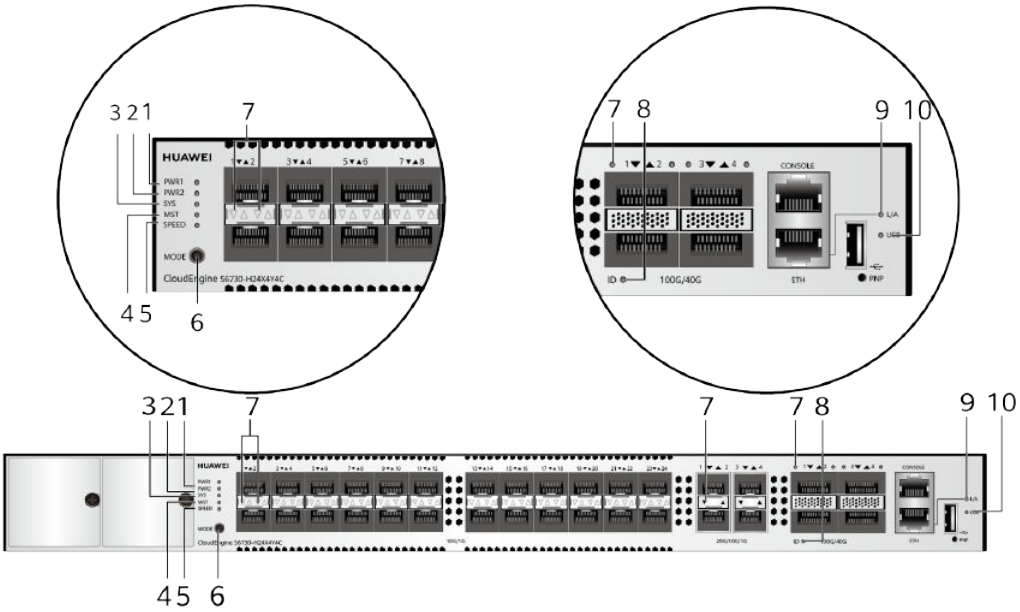

Table 4-208 Description of indicators on the switch

No.	Indicator	Name	Color	Status	Description
1	PWR 1	Power module indicator	-	Off	No power module is available in power module slot 1, or the switch has only one power module but the power module does not work normally.
			Green	Steady on	A power module is installed in power module slot 1 and is working normally.
			Yellow	Steady on	The switch has two power modules installed. Any of the following situations occurs in power module slot 1: ● A power module is available in this slot but it is not connected to a power source. ● The power module in this slot has failed.
2	PWR 2	Power module indicator	-	Off	No power module is available in power module slot 2, or the switch has only one power module but the power module does not work normally.

No.	Indicator	Name	Color	Status	Description
			Green	Steady on	A power module is installed in power module slot 2 and is working normally.
			Yellow	Steady on	The switch has two power modules installed. Any of the following situations occurs in power module slot 2: ● A power module is available in this slot but it is not connected to a power source. ● The power module in this slot has failed.
3	SYS	System status indicator	-	Off	The system is not running.
			Green	Fast blinking	The system is starting.
			Green	Steady on	During the system startup preparation phase, the SYS indicator is steady green, which lasts for a maximum of 30 seconds.
			Green	Slow blinking	The system is running normally.
			Red	Steady on	The system does not work normally after registration, or a fan alarm or a temperature alarm has been generated.
4	MST	Stack indicator	-	Off	● If you are not changing the indicator mode (default): The switch is a standby or slave switch in a stack or the stacking function is not enabled on the switch. ● If you are changing the indicator mode: The stack mode is not selected.
			Green	Steady on	The stack mode is selected. The switch is a standby or slave switch in a stack, and the service port indicators show the stack ID of the switch.

No.	Indicator	Name	Color	Status	Description
			Green	Blinking	• If you are not changing the indicator mode (default): The switch is the master switch in a stack or a standalone switch with the stacking function enabled. • If you are changing the indicator mode: The stack mode is selected. The switch is the master switch in a stack or a standalone switch, and the service port indicators show the stack ID of the master switch. After 45 seconds, the service port indicators automatically restore to the status mode.
5	SPEED	Speed indicator	-	Off	The speed mode is not selected.
			Green	Steady on	The speed mode is selected, and service port indicators show the speed of each port.

No.	Indicator	Name	Color	Status	Description
6	MODE	Mode switch button	-	-	● When you press this button once, the service port indicators change to the stack mode and show the stack ID of the local switch. ● When you press this button a second time, the service port indicators change to the speed mode and show the speed of each service port. ● When you press this button a third time, the service port indicators restore to the default mode and show the connection status and link activity of each service port. If you do not press the MODE button within 45 seconds, the service port indicators restore to the default mode. In this case, the SPEED indicator is off. **NOTE** Hold down the mode switch button for 6s and release it to start the web initial login mode. Either of the following situations will occur: ● If the switch has no configuration file, the system attempts to enter the web initial login mode. In this mode, the status of mode indicators is as follows: ● If the system enters the web initial login mode successfully, all mode indicators turn green and stay on for a maximum of 10 minutes. ● If the system fails to enter the initial login mode, all mode indicators fast blink for 10 seconds and then restore the default status. ● If the switch has a configuration file, the system cannot enter the web initial login mode. In this case, all mode indicators fast blink for 10s, and then return to the default states.
7	ID	ID indicator	-	Off	The ID indicator is not used (default state).
			Blue	Steady on	The indicator identifies the switch to maintain. The ID indicator can be turned on or off remotely to help field engineers find the switch to maintain.

No.	Indicator	Name	Color	Status	Description
8	-	Service port indicator	Meanings of service port indicators vary in different modes. For details, see **Table 4-209** and **Table 4-210**.		
9	L/A	ETH port indicator	-	Off	The ETH port is not connected.
			Green	Steady on	The ETH port is connected.
			Green	Blinking	The ETH port is sending or receiving data.
10	USB	USB-based deployment indicator	-	Off	• No USB flash drive is connected to the switch. • The USB port is damaged. • The indicator is damaged. • The USB flash drive does not have any configuration file and cannot be used for deployment. • The switch has been upgraded using the USB flash drive and is restarting.
			Green	Steady on	A USB-based deployment has been completed.
			Green	Blinking	The system is reading data from a USB flash drive.
			Yellow	Steady on	The switch has copied all the required files and completed the file check. The USB flash drive can be removed from the switch.
			Red	Blinking	An error has occurred when the system is executing the configuration file or reading data from the USB flash drive.

Table 4-209 Description of service port indicators in different modes (two indicators for each port)

Display Mode	Color	Status	Description
Default mode	-	Off	The port is not connected or has been shut down.
	Green	Steady on	A link has been established on the port.

Display Mode	Color	Status	Description
	Yellow	Blinking	The port is sending or receiving data.
MST stack mode	-	Off	Port indicators do not show the stack ID of the switch.
	Green and yellow	Steady on	The switch is not the master switch in a stack. ● If the indicator of a port is steady on, the number of this port is the stack ID of the switch. ● If the indicators of ports 1 to 9 are steady on, the stack ID of the switch is 0.
	Green and yellow	Blinking	The switch is the master switch in a stack. ● If the indicator of a port is blinking, the number of this port is the stack ID of the switch. ● If the indicators of ports 1 to 9 are blinking, the stack ID of the switch is 0.
Speed mode	-	Off	The port is not connected or has been shut down.
	Green and yellow	Steady on	● GE/10GE SFP+ port: The port is operating at 1 Gbit/s. ● 1GE/10GE/25GE SFP28 port: The port is operating at 1 Gbit/s or 10 Gbit/s.
	Green and yellow	Blinking	● GE/10GE SFP+ port: The port is operating at 10 Gbit/s. ● 1GE/10GE/25GE SFP28 port: The port is operating at 25 Gbit/s.

Table 4-210 Description of service port indicators in different modes (one indicator for each port)

Display Mode	Color	Status	Description
Default mode	-	Off	The port is not connected or has been shut down.

Display Mode	Color	Status	Description
	Green	Steady on	A link has been established on the port.
	Green	Blinking	The port is sending or receiving data.
Speed mode	-	Off	The port is not connected or has been shut down.
	Green	Steady on	• 1GE/10GE/25GE SFP28 port: The port is operating at 1 Gbit/s or 10 Gbit/s. • 40GE/100GE QSFP28 port: The port is operating at 40 Gbit/s.
	Green	Blinking	• 1GE/10GE/25GE SFP28 port: The port is operating at 25 Gbit/s. • 40GE/100GE QSFP28 port: The port is operating at 100 Gbit/s.

Power Supply System

The switch can use a single power module or double power modules for 1+1 power redundancy. Pluggable AC and DC power modules can be used together in the same switch.

Heat Dissipation System

The switch has three built-in fans for forced air cooling. Air flows in from the left side and front panel, and exhausts from the right side.

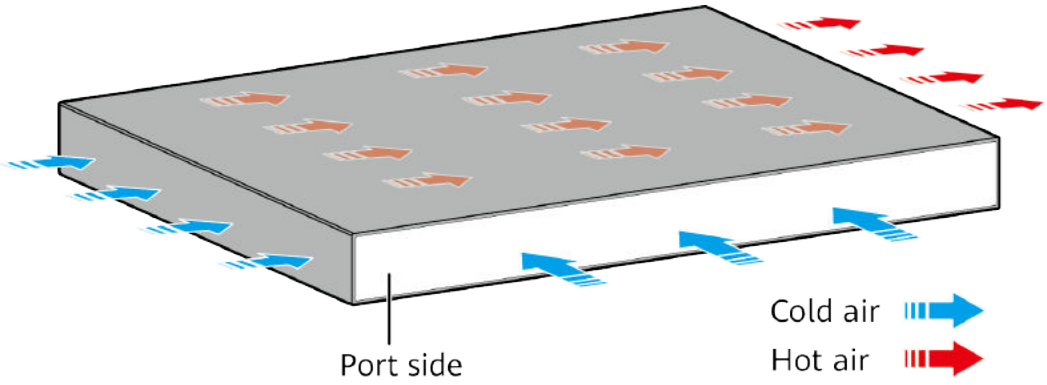

NOTE

This figure only shows the airflow direction and does not depict the actual device.

Technical Specifications

Table 4-211 Technical specifications of the S6730-H24X4Y4C

Item	Specification
Dimensions without packaging (H x W x D) [mm(in.)]	Basic dimensions (excluding the parts protruding from the body): 43.6 mm x 442.0 mm x 220.0 mm (1.72 in. x 17.4 in. x 8.66 in.) Maximum dimensions (the depth is the distance from ports on the front panel to the parts protruding from the rear panel): 43.6 mm x 442.0 mm x 231.0 mm (1.72 in. x 17.40 in. x 9.09 in.)
Dimensions with packaging (H x W x D) [mm(in.)]	115 mm x 545 mm x 360 mm (4.53 in. x 21.46 in. x 14.17 in.)
Chassis height [U]	1 U
Weight without packaging [kg(lb)]	3.4 kg (7.5 lb)
Weight with packaging [kg(lb)]	4.65 kg (10.25 lb)
Typical power consumption [W]	186 W
Typical heat dissipation [BTU/hour]	634.65 BTU/hour
Maximum power consumption [W]	253 W
Maximum heat dissipation [BTU/hour]	863.26 BTU/hour
MTBF [year]	54.68 year
MTTR [hour]	2 hour
Availability	>0.99999
Noise at normal temperature (acoustic power) [dB(A)]	64.5 dB(A)
Noise at normal temperature (acoustic pressure) [dB(A)]	51.7 dB(A)
Number of card slots	0
Number of power slots	2
Number of fans modules	3
Redundant power supply	1+1 Pluggable AC and DC power modules can be used together in the same switch.

Item	Specification
Long-term operating temperature [°C(°F)]	–5°C to +45°C (23°F to 113°F) at an altitude of 0 to 1800 m (0 to 5905.51 ft.)
Short-term operating temperature [°C(°F)]	Not supported
Restriction on the operating temperature variation rate [°C(°F)]	When the altitude is 1800–5000 m (5906–16404 ft.), the highest operating temperature reduces by 1°C (1.8°F) every time the altitude increases by 220 m (722 ft.). Devices cannot start when the temperature is lower than 0°C (32°F). When the QSFP-100G-ER4 optical module is used, the operating temperature ranges from -5°C to +40°C (23°F to 104°F).
Storage temperature [°C(°F)]	–40°C to +70°C (–40°F to +158°F)
Long-term operating relative humidity [RH]	5% RH to 95% RH (non-condensing)
Long-term operating altitude [m(ft.)]	0–5000 m (0–16404 ft.)
Storage altitude [m(ft.)]	0-5000 m (0-16404 ft.)
Power supply mode	Pluggable power supply
Rated input voltage [V]	• AC input: 100 V AC to 240 V AC; 50/60 Hz • High-voltage DC input: 240 V DC • DC input: –48 V DC to –60 V DC
Input voltage range [V]	• AC input: 90–290 V AC; 45–65 Hz • High-voltage DC input: 190 V DC to 290 V DC • DC input: -38.4 V DC to -72 V DC
Maximum input current [A]	The current specifications depend on the pluggable power modules in use. For details, see the related power module specifications.
Memory	4 GB
Flash memory	2 GB in total. To view the available flash memory size, run the display version command.
Console port	RJ45

Item	Specification
Eth Management port	RJ45
USB	Supported
RTC	Supported
RPS input	Not supported
Service port surge protection [kV]	-
Power supply surge protection [kV]	● AC power module configured: ±6 kV in differential mode, ±6 kV in common mode ● DC power module configured: ±2 kV in differential mode, ±4 kV in common mode
Types of fans	Built-in
Heat dissipation mode	Air cooling for heat dissipation, intelligent fan speed adjustment
Airflow direction	Air intake from left and front, air exhaustion from right
PoE	Not supported
Certification	EMC certification Safety certification Manufacturing certification

4.12.5 S6730-H24X4Y4C (02353NRD-003)

Overview

Table 4-212 Basic information about the S6730-H24X4Y4C

Item	Details
Description	S6730-H24X4Y4C (24*10GE SFP+ ports, 4*25GE SFP28 ports, 4*100GE QSFP28 ports, without power module)
Part Number	02353NRD-003
Model	S6730-H24X4Y4C
First supported version	V200R021C10SPC600

Item	Details
Remarks	If the device is used in V200R021C00SPC100, install V200R021SPH013 or a later patch.

Components

Figure 4-89 S6730-H24X4Y4C appearance

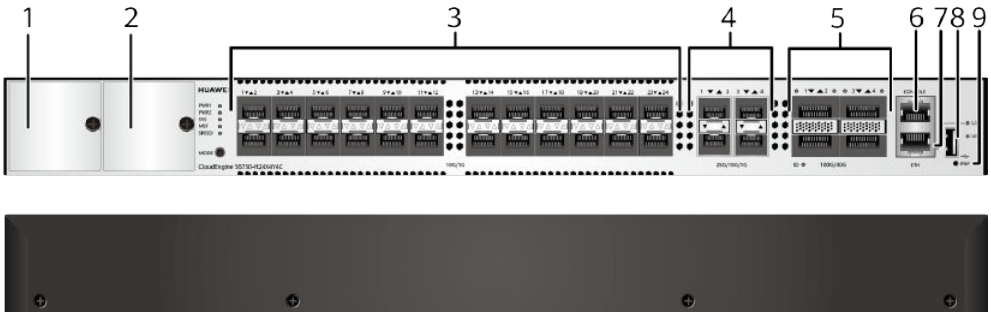

1	Power module slot 1 **NOTE** Applicable power module: • **5.11 PDC260S12-DL (260 W DC Power Module)** • **5.12 PAC300S12-CL (300 W AC Power Module)**	2	Power module slot 2 **NOTE** Applicable power module: • **5.11 PDC260S12-DL (260 W DC Power Module)** • **5.12 PAC300S12-CL (300 W AC Power Module)**
3	Twenty-four 10GE SFP+ ports **NOTE** In V200R021C00 and later versions, a RTU license can be loaded to increase the port rate to 25 Gbit/s.	4	Four 1GE/10GE/25GE SFP28 optical ports
5	Four 40GE/100GE QSFP28 optical ports	6	One console port
7	One ETH management port	8	One USB port

9	One PNP button **NOTICE** To restore the factory settings and reset the switch, hold down the button for at least 6 seconds. To reset the switch, press the button. Resetting the switch will cause service interruption. Exercise caution when you press the PNP button.	-	Ground screw **NOTE** The ground screw is on the left side of the chassis.

Ports

Table 4-213 Ports on the S6730-H24X4Y4C

Port	Connector Type	Description	Available Components
10GE SFP+ optical port	SFP+	A 10GE SFP+ Ethernet optical port supports auto-sensing to 1000 Mbit/s. It sends and receives service data at 1000 Mbit/s or 10 Gbit/s. A RTU license can be loaded to increase the port rate to 25 Gbit/s.	• **GE eSFP optical modules** • **GE-CWDM eSFP optical modules** • **GE-DWDM eSFP optical modules** • **GE SFP copper module** • **10GE SFP+ optical modules (OSXD22N00 and SFP-10G-ZR not supported)** • **1 m, 2 m, 3 m, 5 m, and 10 m SFP+ high-speed copper cables** • **3 m and 10 m SFP+ AOC cables** • **0.5 m and 1.5 m SFP+ dedicated stack cables (supported by the last 16 SFP+ ports and used only for zero-configuration stacking)** • **25GE SFP28 optical modules (need a license loaded)**

Port	Connector Type	Description	Available Components
			• 1 m SFP28 high-speed copper cable (need a license loaded) • 3 m, 5 m, 7 m, and 10 m SFP28 AOC cables (need a license loaded)

Port	Connector Type	Description	Available Components
1GE/10GE/25GE SFP28 optical port	SFP28	A 1GE/10GE/25GE SFP28 optical port sends and receives service data at 1 Gbit/s, 10 Gbit/s, or 25 Gbit/s. When a 25GE optical module is connected to a port, the port can automatically adjust its rate to 25 Gbit/s. When a 10GE optical module is connected to a port, the port can automatically adjust its rate to 10 Gbit/s. Before installing a GE optical module on a port, run the port mode ge command to configure the port to work at 1 Gbit/s.	• **GE eSFP optical modules** • **GE-CWDM eSFP optical modules** • **GE-DWDM eSFP optical modules** • **GE SFP copper module** • **10GE SFP+ optical modules (OSXD22N00 and SFP-10G-ZR not supported)** • **25GE SFP28 optical modules** • **1 m, 2 m, 3 m, 5 m, and 10 m SFP+ high-speed copper cables** • **3 m and 10 m SFP+ AOC cables** • **1 m SFP28 high-speed copper cable** • **3 m, 5 m, 7 m, and 10 m SFP28 AOC cables**

Port	Connector Type	Description	Available Components
40GE/100GE QSFP28 optical port	QSFP28	A 40GE/100GE QSFP28 optical port sends and receives service traffic at 40 Gbit/s or 100 Gbit/s. A QSFP28 optical port cannot be split into four 10GE ports, regardless of whether the port uses a QSFP28 or QSFP+ optical module.	• **40GE QSFP+ optical modules** • **100GE QSFP28 optical modules** • **1 m, 3 m, and 5 m QSFP+ to QSFP+ high-speed copper cables** • **10 m QSFP+ to QSFP+ AOC cable** • **1 m QSFP28 to QSFP28 high-speed copper cable** • **10 m QSFP28 to QSFP28 AOC cable** • **2 m QSFP28 dedicated stack cable**
Console port	RJ45	The console port is connected to a console for on-site configuration.	**Console cable**

Port	Connector Type	Description	Available Components
ETH management port	RJ45	You can connect a switch to a configuration terminal or network management workstation through the ETH management port to configure the switch locally or remotely. You can choose to download the software package through the ETH management port in the BootLoad menu. File transfer through the ETH management port is faster than transfer through the console port.	**Ethernet cable**

Port	Connector Type	Description	Available Components
USB port	USB 2.0 Type A	The USB port can have a USB flash drive connected to upgrade the switch, or transfer configuration files or other files. The USB port can only connect to a USB flash drive that complies with USB 2.0. USB flash drives from different vendors differ in model compatibility and drivers. If a USB flash drive cannot be used, try to replace it with another one from a mainstream vendor. Switches support a maximum of 128 GB USB flash drives.	USB flash drive

Indicators and Buttons

Figure 4-90 Indicators on the S6730-H24X4Y4C

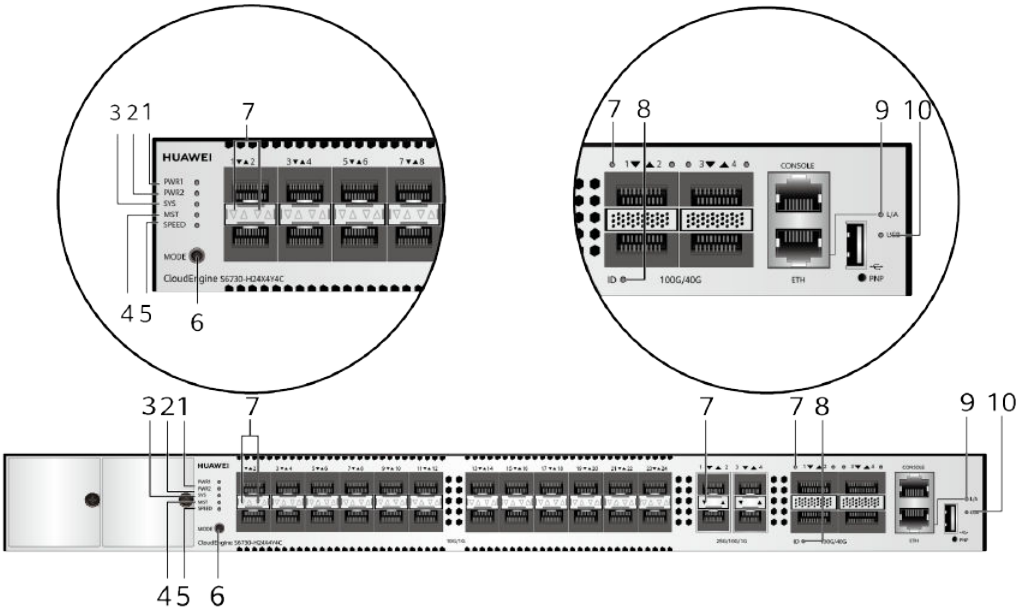

Table 4-214 Description of indicators on the switch

No.	Indicator	Name	Color	Status	Description
1	PWR 1	Power module indicator	-	Off	No power module is available in power module slot 1, or the switch has only one power module but the power module does not work normally.
			Green	Steady on	A power module is installed in power module slot 1 and is working normally.
			Yellow	Steady on	The switch has two power modules installed. Any of the following situations occurs in power module slot 1: ● A power module is available in this slot but it is not connected to a power source. ● The power module in this slot has failed.
2	PWR 2	Power module indicator	-	Off	No power module is available in power module slot 2, or the switch has only one power module but the power module does not work normally.

No.	Indicator	Name	Color	Status	Description
			Green	Steady on	A power module is installed in power module slot 2 and is working normally.
			Yellow	Steady on	The switch has two power modules installed. Any of the following situations occurs in power module slot 2: ● A power module is available in this slot but it is not connected to a power source. ● The power module in this slot has failed.
3	SYS	System status indicator	-	Off	The system is not running.
			Green	Fast blinking	The system is starting.
			Green	Steady on	During the system startup preparation phase, the SYS indicator is steady green, which lasts for a maximum of 30 seconds.
			Green	Slow blinking	The system is running normally.
			Red	Steady on	The system does not work normally after registration, or a fan alarm or a temperature alarm has been generated.
4	MST	Stack indicator	-	Off	● If you are not changing the indicator mode (default): The switch is a standby or slave switch in a stack or the stacking function is not enabled on the switch. ● If you are changing the indicator mode: The stack mode is not selected.
			Green	Steady on	The stack mode is selected. The switch is a standby or slave switch in a stack, and the service port indicators show the stack ID of the switch.

No.	Indicator	Name	Color	Status	Description
			Green	Blinking	• If you are not changing the indicator mode (default): The switch is the master switch in a stack or a standalone switch with the stacking function enabled. • If you are changing the indicator mode: The stack mode is selected. The switch is the master switch in a stack or a standalone switch, and the service port indicators show the stack ID of the master switch. After 45 seconds, the service port indicators automatically restore to the status mode.
5	SPEED	Speed indicator	-	Off	The speed mode is not selected.
			Green	Steady on	The speed mode is selected, and service port indicators show the speed of each port.

No.	Indicator	Name	Color	Status	Description
6	MODE	Mode switch button	-	-	● When you press this button once, the service port indicators change to the stack mode and show the stack ID of the local switch. ● When you press this button a second time, the service port indicators change to the speed mode and show the speed of each service port. ● When you press this button a third time, the service port indicators restore to the default mode and show the connection status and link activity of each service port. If you do not press the MODE button within 45 seconds, the service port indicators restore to the default mode. In this case, the SPEED indicator is off. **NOTE** Hold down the mode switch button for 6s and release it to start the web initial login mode. Either of the following situations will occur: ● If the switch has no configuration file, the system attempts to enter the web initial login mode. In this mode, the status of mode indicators is as follows: ● If the system enters the web initial login mode successfully, all mode indicators turn green and stay on for a maximum of 10 minutes. ● If the system fails to enter the initial login mode, all mode indicators fast blink for 10 seconds and then restore the default status. ● If the switch has a configuration file, the system cannot enter the web initial login mode. In this case, all mode indicators fast blink for 10s, and then return to the default states.
7	ID	ID indicator	-	Off	The ID indicator is not used (default state).
			Blue	Steady on	The indicator identifies the switch to maintain. The ID indicator can be turned on or off remotely to help field engineers find the switch to maintain.

No.	Indicator	Name	Color	Status	Description
8	-	Service port indicator	Meanings of service port indicators vary in different modes. For details, see **Table 4-215** and **Table 4-216**.		
9	L/A	ETH port indicator	-	Off	The ETH port is not connected.
			Green	Steady on	The ETH port is connected.
			Green	Blinking	The ETH port is sending or receiving data.
10	USB	USB-based deployment indicator	-	Off	• No USB flash drive is connected to the switch. • The USB port is damaged. • The indicator is damaged. • The USB flash drive does not have any configuration file and cannot be used for deployment. • The switch has been upgraded using the USB flash drive and is restarting.
			Green	Steady on	A USB-based deployment has been completed.
			Green	Blinking	The system is reading data from a USB flash drive.
			Yellow	Steady on	The switch has copied all the required files and completed the file check. The USB flash drive can be removed from the switch.
			Red	Blinking	An error has occurred when the system is executing the configuration file or reading data from the USB flash drive.

Table 4-215 Description of service port indicators in different modes (two indicators for each port)

Display Mode	Color	Status	Description
Default mode	-	Off	The port is not connected or has been shut down.
	Green	Steady on	A link has been established on the port.

Display Mode	Color	Status	Description
	Yellow	Blinking	The port is sending or receiving data.
MST stack mode	-	Off	Port indicators do not show the stack ID of the switch.
	Green and yellow	Steady on	The switch is not the master switch in a stack. ● If the indicator of a port is steady on, the number of this port is the stack ID of the switch. ● If the indicators of ports 1 to 9 are steady on, the stack ID of the switch is 0.
	Green and yellow	Blinking	The switch is the master switch in a stack. ● If the indicator of a port is blinking, the number of this port is the stack ID of the switch. ● If the indicators of ports 1 to 9 are blinking, the stack ID of the switch is 0.
Speed mode	-	Off	The port is not connected or has been shut down.
	Green and yellow	Steady on	● GE/10GE SFP+ port: The port is operating at 1 Gbit/s. ● 1GE/10GE/25GE SFP28 port: The port is operating at 1 Gbit/s or 10 Gbit/s.
	Green and yellow	Blinking	● GE/10GE SFP+ port: The port is operating at 10 Gbit/s. ● 1GE/10GE/25GE SFP28 port: The port is operating at 25 Gbit/s.

Table 4-216 Description of service port indicators in different modes (one indicator for each port)

Display Mode	Color	Status	Description
Default mode	-	Off	The port is not connected or has been shut down.

Display Mode	Color	Status	Description
	Green	Steady on	A link has been established on the port.
	Green	Blinking	The port is sending or receiving data.
Speed mode	-	Off	The port is not connected or has been shut down.
	Green	Steady on	• 1GE/10GE/25GE SFP28 port: The port is operating at 1 Gbit/s or 10 Gbit/s. • 40GE/100GE QSFP28 port: The port is operating at 40 Gbit/s.
	Green	Blinking	• 1GE/10GE/25GE SFP28 port: The port is operating at 25 Gbit/s. • 40GE/100GE QSFP28 port: The port is operating at 100 Gbit/s.

Power Supply System

The switch can use a single power module or double power modules for 1+1 power redundancy. Pluggable AC and DC power modules can be used together in the same switch.

Heat Dissipation System

The switch has three built-in fans for forced air cooling. Air flows in from the left side and front panel, and exhausts from the right side.

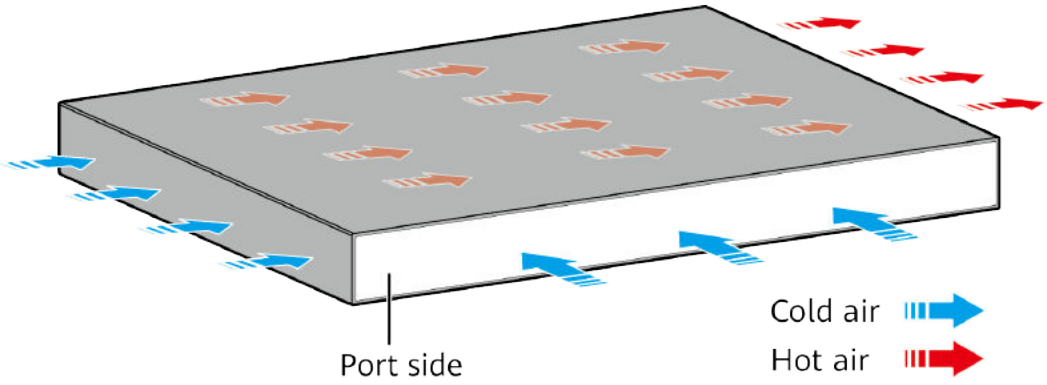

NOTE

This figure only shows the airflow direction and does not depict the actual device.

Technical Specifications

Table 4-217 Technical specifications of the S6730-H24X4Y4C

Item	Specification
Dimensions without packaging (H x W x D) [mm(in.)]	Basic dimensions (excluding the parts protruding from the body): 43.6 mm x 442.0 mm x 220.0 mm (1.72 in. x 17.4 in. x 8.66 in.) Maximum dimensions (the depth is the distance from ports on the front panel to the parts protruding from the rear panel): 43.6 mm x 442.0 mm x 231.0 mm (1.72 in. x 17.40 in. x 9.09 in.)
Dimensions with packaging (H x W x D) [mm(in.)]	115 mm x 545 mm x 360 mm (4.53 in. x 21.46 in. x 14.17 in.)
Chassis height [U]	1 U
Weight without packaging [kg(lb)]	3.4 kg (7.5 lb)
Weight with packaging [kg(lb)]	4.65 kg (10.25 lb)
Typical power consumption [W]	186 W
Typical heat dissipation [BTU/hour]	634.65 BTU/hour
Maximum power consumption [W]	253 W
Maximum heat dissipation [BTU/hour]	863.26 BTU/hour
MTBF [year]	54.68 year
MTTR [hour]	2 hour
Availability	>0.99999
Noise at normal temperature (acoustic power) [dB(A)]	64.5 dB(A)
Noise at normal temperature (acoustic pressure) [dB(A)]	51.7 dB(A)
Number of card slots	0
Number of power slots	2
Number of fans modules	3
Redundant power supply	1+1 Pluggable AC and DC power modules can be used together in the same switch.

Item	Specification
Long-term operating temperature [°C(°F)]	–5°C to +45°C (23°F to 113°F) at an altitude of 0 to 1800 m (0 to 5905.44 ft.)
Short-term operating temperature [°C(°F)]	Not supported
Restriction on the operating temperature variation rate [°C(°F)]	When the altitude is 1800–5000 m (5906–16404 ft.), the highest operating temperature reduces by 1°C (1.8°F) every time the altitude increases by 220 m (722 ft.). Devices cannot start when the temperature is lower than 0°C (32°F). When the QSFP-100G-ER4 optical module is used, the operating temperature ranges from -5°C to +40°C (23°F to 104°F).
Storage temperature [°C(°F)]	–40°C to +70°C (–40°F to +158°F)
Long-term operating relative humidity [RH]	5% RH to 95% RH (non-condensing)
Long-term operating altitude [m(ft.)]	0–5000 m (0–16404 ft.)
Storage altitude [m(ft.)]	0-5000 m (0-16404 ft.)
Power supply mode	Pluggable power supply
Rated input voltage [V]	● AC input: 100 V AC to 240 V AC; 50/60 Hz ● High-voltage DC input: 240 V DC ● DC input: –48 V DC to –60 V DC
Input voltage range [V]	● AC input: 90–290 V AC; 45–65 Hz ● High-voltage DC input: 190 V DC to 290 V DC ● DC input: -38.4 V DC to -72 V DC
Maximum input current [A]	The current specifications depend on the pluggable power modules in use. For details, see the related power module specifications.
Memory	4 GB
Flash memory	2 GB in total. To view the available flash memory size, run the display version command.
Console port	RJ45

Item	Specification
Eth Management port	RJ45
USB	Supported
RTC	Supported
RPS input	Not supported
Service port surge protection [kV]	-
Power supply surge protection [kV]	● AC power module configured: ±6 kV in differential mode, ±6 kV in common mode ● DC power module configured: ±2 kV in differential mode, ±4 kV in common mode
Types of fans	Built-in
Heat dissipation mode	Air cooling for heat dissipation, intelligent fan speed adjustment
Airflow direction	Air intake from left and front, air exhaustion from right
PoE	Not supported
Certification	EMC certification Safety certification Manufacturing certification

4.12.6 S6730-H28Y4C (02353LGV)

Overview

Table 4-218 Basic information about the S6730-H28Y4C

Item	Details
Description	S6730-H28Y4C (28*25GE SFP28 ports, 4*100GE QSFP28 ports, without power module)
Part Number	02353LGV
Model	S6730-H28Y4C
First supported version	V200R020C00

Components

Figure 4-91 S6730-H28Y4C appearance

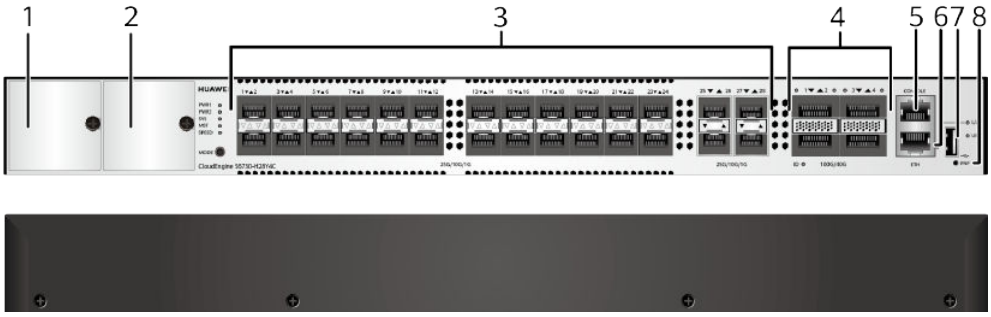

1	Power module slot 1 **NOTE** Applicable power module: • **5.11 PDC260S12-DL (260 W DC Power Module)** • **5.12 PAC300S12-CL (300 W AC Power Module)**	2	Power module slot 2 **NOTE** Applicable power module: • **5.11 PDC260S12-DL (260 W DC Power Module)** • **5.12 PAC300S12-CL (300 W AC Power Module)**
3	Twenty-eight 1GE/10GE/25GE SFP28 optical ports	4	Four 40GE/100GE QSFP28 optical ports
5	One console port	6	One ETH management port
7	One USB port	8	One PNP button **NOTICE** To restore the factory settings and reset the switch, hold down the button for at least 6 seconds. To reset the switch, press the button. Resetting the switch will cause service interruption. Exercise caution when you press the PNP button.
-	Ground screw **NOTE** The ground screw is on the left side of the chassis.	-	-

Ports

Table 4-219 Ports on the S6730-H28Y4C

Port	Connector Type	Description	Available Components
1GE/10GE/25GE SFP28 optical port	SFP28	A 1GE/10GE/25GE SFP28 optical port sends and receives service data at 1 Gbit/s, 10 Gbit/s, or 25 Gbit/s. When a 25GE optical module is connected to a port, the port can automatically adjust its rate to 25 Gbit/s. When a 10GE optical module is connected to a port, the port can automatically adjust its rate to 10 Gbit/s. Before installing a GE optical module on a port, run the port mode ge command to configure the port to work at 1 Gbit/s.	• **GE eSFP optical modules** • **GE-CWDM eSFP optical modules** • **GE-DWDM eSFP optical modules** • **GE SFP copper module** • **10GE SFP+ optical modules (OSXD22N00 and SFP-10G-ZR not supported)** • **25GE SFP28 optical modules** • **1 m, 2 m, 3 m, 5 m, and 10 m SFP+ high-speed copper cables** • **3 m and 10 m SFP+ AOC cables** • **1 m SFP28 high-speed copper cable** • **3 m, 5 m, 7 m, and 10 m SFP28 AOC cables**

Port	Connector Type	Description	Available Components
40GE/100GE QSFP28 optical port	QSFP28	A 40GE/100GE QSFP28 optical port sends and receives service traffic at 40 Gbit/s or 100 Gbit/s. A QSFP28 optical port cannot be split into four 10GE ports, regardless of whether the port uses a QSFP28 or QSFP+ optical module.	• **40GE QSFP+ optical modules** • **100GE QSFP28 optical modules** • **1 m, 3 m, and 5 m QSFP+ to QSFP+ high-speed copper cables** • **10 m QSFP+ to QSFP+ AOC cable** • **1 m QSFP28 to QSFP28 high-speed copper cable** • **10 m QSFP28 to QSFP28 AOC cable** • **2 m QSFP28 dedicated stack cable (supported in V200R020C10 and later versions)**
Console port	RJ45	The console port is connected to a console for on-site configuration.	**Console cable**

Port	Connector Type	Description	Available Components
ETH management port	RJ45	You can connect a switch to a configuration terminal or network management workstation through the ETH management port to configure the switch locally or remotely. You can choose to download the software package through the ETH management port in the BootLoad menu. File transfer through the ETH management port is faster than transfer through the console port.	**Ethernet cable**

Port	Connector Type	Description	Available Components
USB port	USB 2.0 Type A	The USB port can have a USB flash drive connected to upgrade the switch, or transfer configuration files or other files. The USB port can only connect to a USB flash drive that complies with USB 2.0. USB flash drives from different vendors differ in model compatibility and drivers. If a USB flash drive cannot be used, try to replace it with another one from a mainstream vendor. Switches support a maximum of 128 GB USB flash drives.	USB flash drive

Indicators and Buttons

The S6730-H28Y4C has the same types of indicators as the S6730-H24X4Y4C. For details, see the S6730-H24X4Y4C.

Power Supply System

The switch can use a single power module or double power modules for 1+1 power redundancy. Pluggable AC and DC power modules can be used together in the same switch.

Heat Dissipation System

The switch has three built-in fans for forced air cooling. Air flows in from the left side and front panel, and exhausts from the right side.

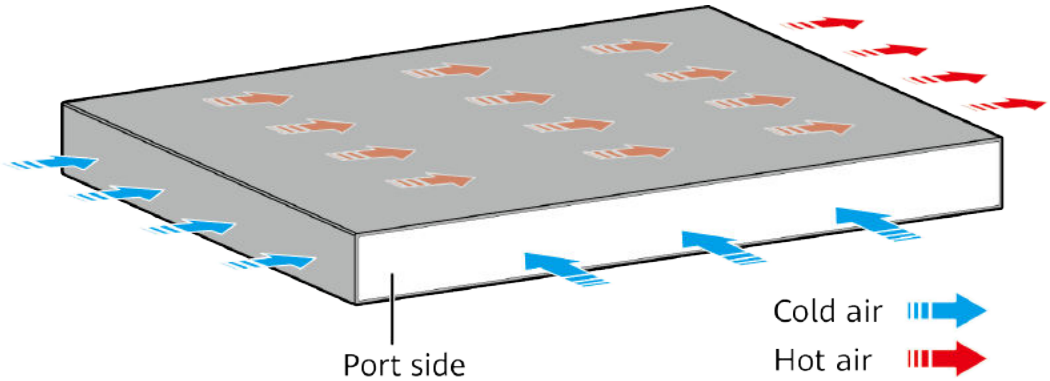

NOTE

This figure only shows the airflow direction and does not depict the actual device.

Technical Specifications

Table 4-220 Technical specifications of the S6730-H28Y4C

Item	Specification
Dimensions without packaging (H x W x D) [mm(in.)]	Basic dimensions (excluding the parts protruding from the body): 43.6 mm x 442.0 mm x 220.0 mm (1.72 in. x 17.4 in. x 8.66 in.) Maximum dimensions (the depth is the distance from ports on the front panel to the parts protruding from the rear panel): 43.6 mm x 442.0 mm x 231.0 mm (1.72 in. x 17.40 in. x 9.09 in.)
Dimensions with packaging (H x W x D) [mm(in.)]	115 mm × 545 mm × 360 mm (4.53 in. x 21.46 in. x 14.17 in.)
Chassis height [U]	1 U
Weight without packaging [kg(lb)]	3.4 kg (7.5 lb)
Weight with packaging [kg(lb)]	4.65 kg (10.25 lb)
Typical power consumption [W]	186 W
Typical heat dissipation [BTU/hour]	634.65 BTU/hour
Maximum power consumption [W]	253 W
Maximum heat dissipation [BTU/hour]	863.26 BTU/hour
MTBF [year]	54.68 year
MTTR [hour]	2 hour
Availability	>0.99999

Item	Specification
Noise at normal temperature (acoustic power) [dB(A)]	64.5 dB(A)
Noise at normal temperature (acoustic pressure) [dB(A)]	51.7 dB(A)
Number of card slots	0
Number of power slots	2
Number of fans modules	3
Redundant power supply	1+1 Pluggable AC and DC power modules can be used together in the same switch.
Long-term operating temperature [°C(°F)]	-5°C to +45°C (23°F to 113°F) at an altitude of 0-1800 m (0-5906 ft.)
Short-term operating temperature [°C(°F)]	Not supported
Restriction on the operating temperature variation rate [°C(°F)]	When the altitude is 1800–5000 m (5906–16404 ft.), the highest operating temperature reduces by 1°C (1.8°F) every time the altitude increases by 220 m (722 ft.). Devices cannot start when the temperature is lower than 0°C (32°F). When the QSFP-100G-ER4 optical module is used, the operating temperature ranges from -5°C to +40°C (23°F to 104°F).
Storage temperature [°C(°F)]	-40°C to +70°C (-40°F to +158°F)
Long-term operating relative humidity [RH]	5% to 95%, noncondensing
Long-term operating altitude [m(ft.)]	0-5000 m (0-16404 ft.)
Storage altitude [m(ft.)]	0-5000 m (0-16404 ft.)
Power supply mode	Pluggable power supply
Rated input voltage [V]	• AC input: 100 V AC to 240 V AC; 50/60 Hz • High-voltage DC input: 240 V DC • DC input: –48 V DC to –60 V DC

Item	Specification
Input voltage range [V]	● AC input: 90–290 V AC; 45–65 Hz ● High-voltage DC input: 190 V DC to 290 V DC ● DC input: -38.4 V DC to -72 V DC
Maximum input current [A]	The current specifications depend on the pluggable power modules in use. For details, see the related power module specifications.
Memory	4 GB
Flash memory	2 GB in total. To view the available flash memory size, run the display version command.
Console port	RJ45
Eth Management port	RJ45
USB	Supported
RTC	Supported
RPS input	Not supported
Service port surge protection [kV]	-
Power supply surge protection [kV]	● AC power module configured: ±6 kV in differential mode, ±6 kV in common mode ● DC power module configured: ±2 kV in differential mode, ±4 kV in common mode
Types of fans	Built-in
Heat dissipation mode	Heat dissipation with fan, intelligent fan speed adjustment
Airflow direction	Air flows in from the left side and front panel, and exhausts from the right side.
PoE	Not supported
Certification	EMC certification Safety certification Manufacturing certification

4.12.7 S6730-H28Y4C (02353LGV-002)

Overview

Table 4-221 Basic information about the S6730-H28Y4C

Item	Details
Description	S6730-H28Y4C (28*25GE SFP28 ports, 4*100GE QSFP28 ports, without power module)
Part Number	02353LGV-002
Model	S6730-H28Y4C
First supported version	V200R021C10SPC500
Remarks	If the device is used in V200R021C00SPC100, install V200R021SPH011 or a later patch.

Components

Figure 4-92 S6730-H28Y4C appearance

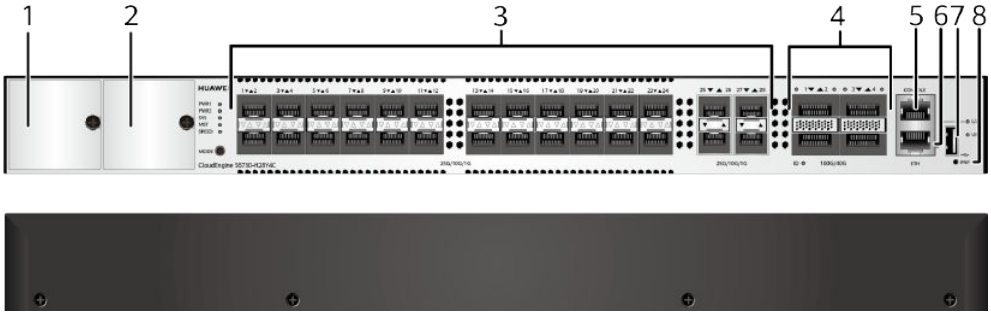

1	Power module slot 1 **NOTE** Applicable power module: • **5.11 PDC260S12-DL (260 W DC Power Module)** • **5.12 PAC300S12-CL (300 W AC Power Module)**	2	Power module slot 2 **NOTE** Applicable power module: • **5.11 PDC260S12-DL (260 W DC Power Module)** • **5.12 PAC300S12-CL (300 W AC Power Module)**
3	Twenty-eight 1GE/10GE/25GE SFP28 optical ports	4	Four 40GE/100GE QSFP28 optical ports
5	One console port	6	One ETH management port

7	One USB port	8	One PNP button **NOTICE** To restore the factory settings and reset the switch, hold down the button for at least 6 seconds. To reset the switch, press the button. Resetting the switch will cause service interruption. Exercise caution when you press the PNP button.
-	Ground screw **NOTE** The ground screw is on the left side of the chassis.	-	-

Ports

Table 4-222 Ports on the S6730-H28Y4C

Port	Connector Type	Description	Available Components
1GE/10GE/25GE SFP28 optical port	SFP28	A 1GE/10GE/25GE SFP28 optical port sends and receives service data at 1 Gbit/s, 10 Gbit/s, or 25 Gbit/s. When a 25GE optical module is connected to a port, the port can automatically adjust its rate to 25 Gbit/s. When a 10GE optical module is connected to a port, the port can automatically adjust its rate to 10 Gbit/s. Before installing a GE optical module on a port, run the port mode ge command to configure the port to work at 1 Gbit/s.	• **GE eSFP optical modules** • **GE-CWDM eSFP optical modules** • **GE-DWDM eSFP optical modules** • **GE SFP copper module** • **10GE SFP+ optical modules (OSXD22N00 and SFP-10G-ZR not supported)** • **25GE SFP28 optical modules** • **1 m, 2 m, 3 m, 5 m, and 10 m SFP+ high-speed copper cables** • **3 m and 10 m SFP+ AOC cables** • **1 m SFP28 high-speed copper cable** • **3 m, 5 m, 7 m, and 10 m SFP28 AOC cables**

Port	Connector Type	Description	Available Components
40GE/100GE QSFP28 optical port	QSFP28	A 40GE/100GE QSFP28 optical port sends and receives service traffic at 40 Gbit/s or 100 Gbit/s. A QSFP28 optical port cannot be split into four 10GE ports, regardless of whether the port uses a QSFP28 or QSFP+ optical module.	• **40GE QSFP+ optical modules** • **100GE QSFP28 optical modules** • **1 m, 3 m, and 5 m QSFP+ to QSFP+ high-speed copper cables** • **10 m QSFP+ to QSFP+ AOC cable** • **1 m QSFP28 to QSFP28 high-speed copper cable** • **10 m QSFP28 to QSFP28 AOC cable** • **2 m QSFP28 dedicated stack cable**
Console port	RJ45	The console port is connected to a console for on-site configuration.	**Console cable**

Port	Connector Type	Description	Available Components
ETH management port	RJ45	You can connect a switch to a configuration terminal or network management workstation through the ETH management port to configure the switch locally or remotely. You can choose to download the software package through the ETH management port in the BootLoad menu. File transfer through the ETH management port is faster than transfer through the console port.	**Ethernet cable**

Port	Connector Type	Description	Available Components
USB port	USB 2.0 Type A	The USB port can have a USB flash drive connected to upgrade the switch, or transfer configuration files or other files. The USB port can only connect to a USB flash drive that complies with USB 2.0. USB flash drives from different vendors differ in model compatibility and drivers. If a USB flash drive cannot be used, try to replace it with another one from a mainstream vendor. Switches support a maximum of 128 GB USB flash drives.	USB flash drive

Indicators and Buttons

The S6730-H28Y4C has the same types of indicators as the S6730-H24X4Y4C. For details, see the S6730-H24X4Y4C.

Power Supply System

The switch can use a single power module or double power modules for 1+1 power redundancy. Pluggable AC and DC power modules can be used together in the same switch.

Heat Dissipation System

The switch has three built-in fans for forced air cooling. Air flows in from the left side and front panel, and exhausts from the right side.

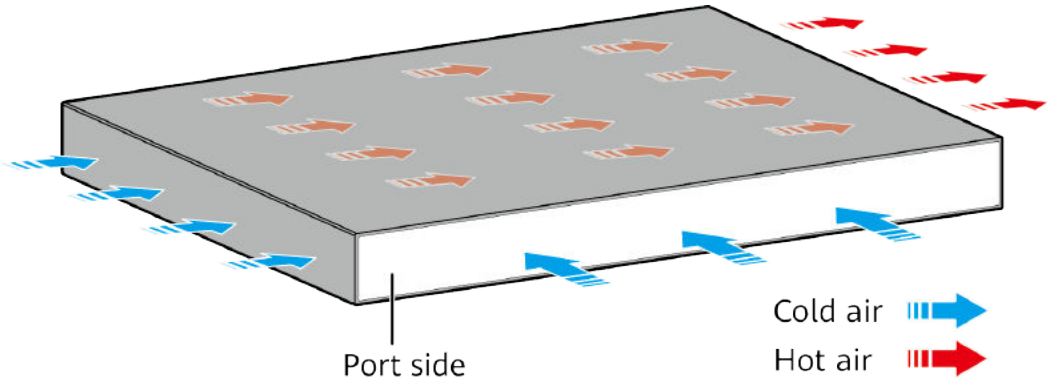

NOTE

This figure only shows the airflow direction and does not depict the actual device.

Technical Specifications

Table 4-223 Technical specifications of the S6730-H28Y4C

Item	Specification
Dimensions without packaging (H x W x D) [mm(in.)]	Basic dimensions (excluding the parts protruding from the body): 43.6 mm x 442.0 mm x 220.0 mm (1.72 in. x 17.4 in. x 8.66 in.) Maximum dimensions (the depth is the distance from ports on the front panel to the parts protruding from the rear panel): 43.6 mm x 442.0 mm x 231.0 mm (1.72 in. x 17.40 in. x 9.09 in.)
Dimensions with packaging (H x W x D) [mm(in.)]	115 mm x 545 mm x 360 mm (4.53 in. x 21.46 in. x 14.17 in.)
Chassis height [U]	1 U
Weight without packaging [kg(lb)]	3.4 kg (7.5 lb)
Weight with packaging [kg(lb)]	4.65 kg (10.25 lb)
Typical power consumption [W]	186 W
Typical heat dissipation [BTU/hour]	634.65 BTU/hour
Maximum power consumption [W]	253 W
Maximum heat dissipation [BTU/hour]	863.26 BTU/hour
MTBF [year]	54.68 year
MTTR [hour]	2 hour
Availability	>0.99999

Item	Specification
Noise at normal temperature (acoustic power) [dB(A)]	64.5 dB(A)
Noise at normal temperature (acoustic pressure) [dB(A)]	51.7 dB(A)
Number of card slots	0
Number of power slots	2
Number of fans modules	3
Redundant power supply	1+1 Pluggable AC and DC power modules can be used together in the same switch.
Long-term operating temperature [°C(°F)]	–5°C to +45°C (23°F to 113°F) at an altitude of 0 to 1800 m (0 to 5905.51 ft.)
Short-term operating temperature [°C(°F)]	Not supported
Restriction on the operating temperature variation rate [°C(°F)]	When the altitude is 1800–5000 m (5906–16404 ft.), the highest operating temperature reduces by 1°C (1.8°F) every time the altitude increases by 220 m (722 ft.). Devices cannot start when the temperature is lower than 0°C (32°F). When the QSFP-100G-ER4 optical module is used, the operating temperature ranges from -5°C to +40°C (23°F to 104°F).
Storage temperature [°C(°F)]	–40°C to +70°C (–40°F to +158°F)
Long-term operating relative humidity [RH]	5% RH to 95% RH (non-condensing)
Long-term operating altitude [m(ft.)]	0–5000 m (0–16404 ft.)
Storage altitude [m(ft.)]	0-5000 m (0-16404 ft.)
Power supply mode	Pluggable power supply
Rated input voltage [V]	• AC input: 100 V AC to 240 V AC; 50/60 Hz • High-voltage DC input: 240 V DC • DC input: –48 V DC to –60 V DC

Item	Specification
Input voltage range [V]	● AC input: 90–290 V AC; 45–65 Hz ● High-voltage DC input: 190 V DC to 290 V DC ● DC input: -38.4 V DC to -72 V DC
Maximum input current [A]	The current specifications depend on the pluggable power modules in use. For details, see the related power module specifications.
Memory	4 GB
Flash memory	2 GB in total. To view the available flash memory size, run the display version command.
Console port	RJ45
Eth Management port	RJ45
USB	Supported
RTC	Supported
RPS input	Not supported
Service port surge protection [kV]	-
Power supply surge protection [kV]	● AC power module configured: ±6 kV in differential mode, ±6 kV in common mode ● DC power module configured: ±2 kV in differential mode, ±4 kV in common mode
Types of fans	Built-in
Heat dissipation mode	Air cooling for heat dissipation, intelligent fan speed adjustment
Airflow direction	Air intake from left and front, air exhaustion from right
PoE	Not supported
Certification	EMC certification Safety certification Manufacturing certification

4.12.8 S6730-H28Y4C (02353LGV-003)

Overview

Table 4-224 Basic information about the S6730-H28Y4C

Item	Details
Description	S6730-H28Y4C (28*25GE SFP28 ports, 4*100GE QSFP28 ports, without power module)
Part Number	02353LGV-003
Model	S6730-H28Y4C
First supported version	V200R021C10SPC600
Remarks	If the device is used in V200R021C00SPC100, install V200R021SPH013 or a later patch.

Components

Figure 4-93 S6730-H28Y4C appearance

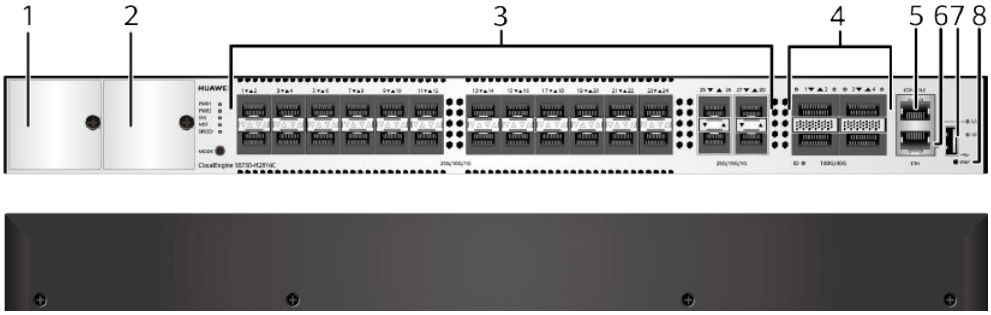

1	Power module slot 1 **NOTE** Applicable power module: • **5.11 PDC260S12-DL (260 W DC Power Module)** • **5.12 PAC300S12-CL (300 W AC Power Module)**	2	Power module slot 2 **NOTE** Applicable power module: • **5.11 PDC260S12-DL (260 W DC Power Module)** • **5.12 PAC300S12-CL (300 W AC Power Module)**
3	Twenty-eight 1GE/10GE/25GE SFP28 optical ports	4	Four 40GE/100GE QSFP28 optical ports
5	One console port	6	One ETH management port

7	One USB port	8	One PNP button **NOTICE** To restore the factory settings and reset the switch, hold down the button for at least 6 seconds. To reset the switch, press the button. Resetting the switch will cause service interruption. Exercise caution when you press the PNP button.
-	Ground screw **NOTE** The ground screw is on the left side of the chassis.	-	-

Ports

Table 4-225 Ports on the S6730-H28Y4C

Port	Connector Type	Description	Available Components
1GE/10GE/25GE SFP28 optical port	SFP28	A 1GE/10GE/25GE SFP28 optical port sends and receives service data at 1 Gbit/s, 10 Gbit/s, or 25 Gbit/s. When a 25GE optical module is connected to a port, the port can automatically adjust its rate to 25 Gbit/s. When a 10GE optical module is connected to a port, the port can automatically adjust its rate to 10 Gbit/s. Before installing a GE optical module on a port, run the port mode ge command to configure the port to work at 1 Gbit/s.	• **GE eSFP optical modules** • **GE-CWDM eSFP optical modules** • **GE-DWDM eSFP optical modules** • **GE SFP copper module** • **10GE SFP+ optical modules (OSXD22N00 and SFP-10G-ZR not supported)** • **25GE SFP28 optical modules** • **1 m, 2 m, 3 m, 5 m, and 10 m SFP+ high-speed copper cables** • **3 m and 10 m SFP+ AOC cables** • **1 m SFP28 high-speed copper cable** • **3 m, 5 m, 7 m, and 10 m SFP28 AOC cables**

Port	Connector Type	Description	Available Components
40GE/100GE QSFP28 optical port	QSFP28	A 40GE/100GE QSFP28 optical port sends and receives service traffic at 40 Gbit/s or 100 Gbit/s. A QSFP28 optical port cannot be split into four 10GE ports, regardless of whether the port uses a QSFP28 or QSFP+ optical module.	• **40GE QSFP+ optical modules** • **100GE QSFP28 optical modules** • **1 m, 3 m, and 5 m QSFP+ to QSFP+ high-speed copper cables** • **10 m QSFP+ to QSFP+ AOC cable** • **1 m QSFP28 to QSFP28 high-speed copper cable** • **10 m QSFP28 to QSFP28 AOC cable** • **2 m QSFP28 dedicated stack cable**
Console port	RJ45	The console port is connected to a console for on-site configuration.	**Console cable**

Port	Connector Type	Description	Available Components
ETH management port	RJ45	You can connect a switch to a configuration terminal or network management workstation through the ETH management port to configure the switch locally or remotely. You can choose to download the software package through the ETH management port in the BootLoad menu. File transfer through the ETH management port is faster than transfer through the console port.	**Ethernet cable**

Port	Connector Type	Description	Available Components
USB port	USB 2.0 Type A	The USB port can have a USB flash drive connected to upgrade the switch, or transfer configuration files or other files. The USB port can only connect to a USB flash drive that complies with USB 2.0. USB flash drives from different vendors differ in model compatibility and drivers. If a USB flash drive cannot be used, try to replace it with another one from a mainstream vendor. Switches support a maximum of 128 GB USB flash drives.	USB flash drive

Indicators and Buttons

The S6730-H28Y4C has the same types of indicators as the S6730-H24X4Y4C. For details, see the S6730-H24X4Y4C.

Power Supply System

The switch can use a single power module or double power modules for 1+1 power redundancy. Pluggable AC and DC power modules can be used together in the same switch.

Heat Dissipation System

The switch has three built-in fans for forced air cooling. Air flows in from the left side and front panel, and exhausts from the right side.

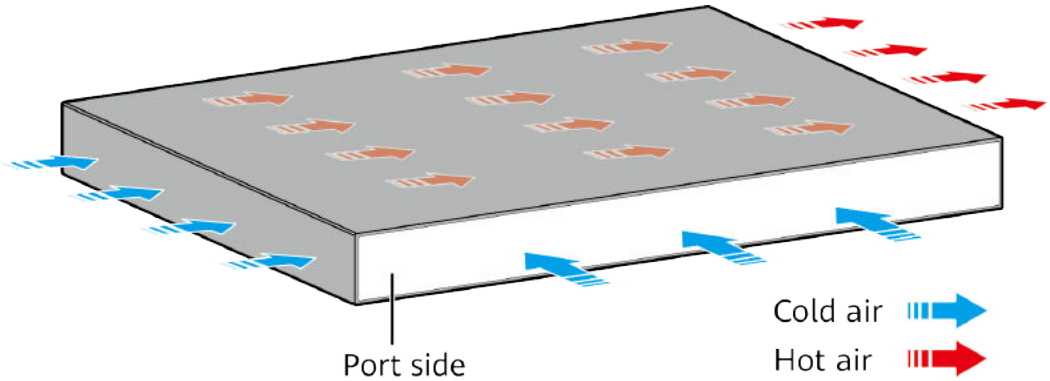

NOTE

This figure only shows the airflow direction and does not depict the actual device.

Technical Specifications

Table 4-226 Technical specifications of the S6730-H28Y4C

Item	Specification
Dimensions without packaging (H x W x D) [mm(in.)]	Basic dimensions (excluding the parts protruding from the body): 43.6 mm x 442.0 mm x 220.0 mm (1.72 in. x 17.4 in. x 8.66 in.) Maximum dimensions (the depth is the distance from ports on the front panel to the parts protruding from the rear panel): 43.6 mm x 442.0 mm x 231.0 mm (1.72 in. x 17.40 in. x 9.09 in.)
Dimensions with packaging (H x W x D) [mm(in.)]	115 mm x 545 mm x 360 mm (4.53 in. x 21.46 in. x 14.17 in.)
Chassis height [U]	1 U
Weight without packaging [kg(lb)]	3.4 kg (7.5 lb)
Weight with packaging [kg(lb)]	4.65 kg (10.25 lb)
Typical power consumption [W]	186 W
Typical heat dissipation [BTU/hour]	634.65 BTU/hour
Maximum power consumption [W]	253 W
Maximum heat dissipation [BTU/hour]	863.26 BTU/hour
MTBF [year]	54.68 year
MTTR [hour]	2 hour
Availability	>0.99999

Item	Specification
Noise at normal temperature (acoustic power) [dB(A)]	64.5 dB(A)
Noise at normal temperature (acoustic pressure) [dB(A)]	51.7 dB(A)
Number of card slots	0
Number of power slots	2
Number of fans modules	3
Redundant power supply	1+1 Pluggable AC and DC power modules can be used together in the same switch.
Long-term operating temperature [°C(°F)]	–5°C to +45°C (23°F to 113°F) at an altitude of 0 to 1800 m (0 to 5905.44 ft.)
Short-term operating temperature [°C(°F)]	Not supported
Restriction on the operating temperature variation rate [°C(°F)]	When the altitude is 1800–5000 m (5906–16404 ft.), the highest operating temperature reduces by 1°C (1.8°F) every time the altitude increases by 220 m (722 ft.). Devices cannot start when the temperature is lower than 0°C (32°F). When the QSFP-100G-ER4 optical module is used, the operating temperature ranges from -5°C to +40°C (23°F to 104°F).
Storage temperature [°C(°F)]	–40°C to +70°C (–40°F to +158°F)
Long-term operating relative humidity [RH]	5% RH to 95% RH (non-condensing)
Long-term operating altitude [m(ft.)]	0–5000 m (0–16404 ft.)
Storage altitude [m(ft.)]	0-5000 m (0-16404 ft.)
Power supply mode	Pluggable power supply
Rated input voltage [V]	• AC input: 100 V AC to 240 V AC; 50/60 Hz • High-voltage DC input: 240 V DC • DC input: –48 V DC to –60 V DC

Item	Specification
Input voltage range [V]	● AC input: 90–290 V AC; 45–65 Hz ● High-voltage DC input: 190 V DC to 290 V DC ● DC input: -38.4 V DC to -72 V DC
Maximum input current [A]	The current specifications depend on the pluggable power modules in use. For details, see the related power module specifications.
Memory	4 GB
Flash memory	2 GB in total. To view the available flash memory size, run the display version command.
Console port	RJ45
Eth Management port	RJ45
USB	Supported
RTC	Supported
RPS input	Not supported
Service port surge protection [kV]	-
Power supply surge protection [kV]	● AC power module configured: ±6 kV in differential mode, ±6 kV in common mode ● DC power module configured: ±2 kV in differential mode, ±4 kV in common mode
Types of fans	Built-in
Heat dissipation mode	Air cooling for heat dissipation, intelligent fan speed adjustment
Airflow direction	Air intake from left and front, air exhaustion from right
PoE	Not supported
Certification	EMC certification Safety certification Manufacturing certification

4.13 S6730-S

4.13.1 S6730-S24X6Q (02353AJW/02353AJW-001/02353AJW-003/02353AJW-004)

Version Mapping

Table 4-227 lists the mapping between the S6730-S24X6Q chassis and software versions.

Table 4-227 Version mapping

Series	Model	Software Version
S6730-S	S6730-S24X6Q	02353AJW: V200R019C00 and later versions 02353AJW-001: V200R020C10 and later versions 02353AJW-003: V200R021C10SPC500 and later versions (If V200R021C00SPC100 is used, install V200R021SPH011 or a later patch.) 02353AJW-004: V200R021C10SPC600 and later versions (If V200R021C00SPC100 is used, install V200R021SPH013 or a later patch.) **NOTE** V200R021C01 is not supported. Some models cannot be downgraded due to component upgrade. Therefore, you are advised to run the **display system-software information** command (supported in V200R021C00 and later versions) to check the software versions supported by the device before performing a downgrade.

Appearance and Structure

Figure 4-94 S6730-S24X6Q appearance

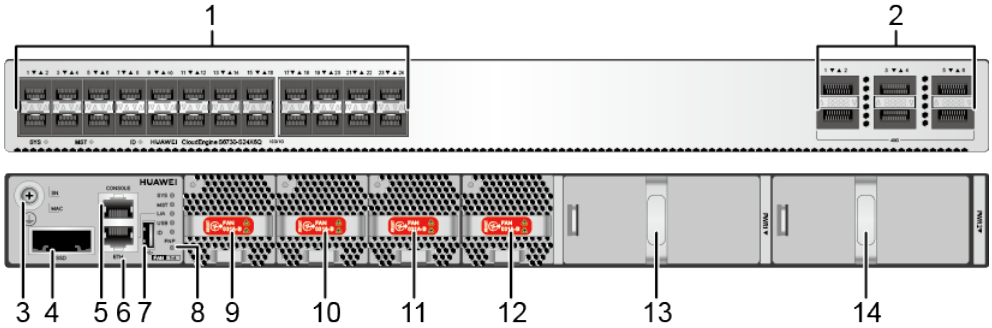

1	Twenty-four 10GE SFP+ ports Applicable modules and cables: • **GE optical module** • **GE-CWDM optical module** • **GE-DWDM optical module** • **GE copper module** • **10GE SFP+ optical module (OSXD22N00 not supported)** • **10GE-CWDM optical module** • **10GE-DWDM optical module** • **1 m, 3 m, 5 m, and 10 m SFP+ high-speed copper cables** • **3 m and 10 m SFP+ AOC cables** • **0.5 m and 1.5 m SFP+ dedicated stack cables (supported by the last 16 SFP+ ports and used only for zero-configuration stacking)**	2	Six 40GE QSFP+ optical ports Applicable modules and cables: • **QSFP+ optical module** • **1 m, 3 m, and 5 m QSFP+ to QSFP+ high-speed copper cables** • **10 m QSFP+ to QSFP+ AOC cable** • **2 m QSFP28 dedicated stack cable (supported in V200R020C10 and later versions)** **NOTE** A QSFP+ optical port cannot be split into four 10GE ports.
3	Ground screw **NOTE** It is used with a **ground cable**.	4	SSD card slot **NOTE** This slot is reserved for future use.
5	One console port	6	One ETH management port
7	One USB port	8	One PNP button **NOTICE** To restore the factory settings and reset the switch, hold down the button for at least 6 seconds. To reset the switch, press the button. Resetting the switch will cause service interruption. Exercise caution when you press the PNP button.
9	Fan module slot 1 **NOTE** Applicable fan module: **6.4 FAN-031A-B (Fan box(B,FAN panel side exhaust))**	10	Fan module slot 2 **NOTE** Applicable fan module: **6.4 FAN-031A-B (Fan box(B,FAN panel side exhaust))**

11	Fan module slot 3 **NOTE** Applicable fan module: **6.4 FAN-031A-B (Fan box(B,FAN panel side exhaust))**	12	Fan module slot 4 **NOTE** Applicable fan module: **6.4 FAN-031A-B (Fan box(B,FAN panel side exhaust))**
13	Power module slot 1 **NOTE** Applicable power module: • **5.16 PAC600S12-CB (600 W AC Power Module)** • **5.18 PAC600S12-EB (600 W AC Power Module)** • **5.17 PAC600S12-DB (600 W AC Power Module)** (applicable in V200R020C10 and later versions) • **5.19 PDC1000S12-DB (1000 W DC Power Module)**	14	Power module slot 2 **NOTE** Applicable power module: • **5.16 PAC600S12-CB (600 W AC Power Module)** • **5.18 PAC600S12-EB (600 W AC Power Module)** • **5.17 PAC600S12-DB (600 W AC Power Module)** (applicable in V200R020C10 and later versions) • **5.19 PDC1000S12-DB (1000 W DC Power Module)**

Port Description

10GE SFP+ optical port

A 10GE SFP+ Ethernet optical port supports auto-sensing to 1000 Mbit/s. It sends and receives service data at 1000 Mbit/s or 10 Gbit/s. **Table 4-228** describes the attributes of a 10GE SFP+ Ethernet optical port.

Table 4-228 Attributes of a 10GE SFP+ port

Attribute	Description
Connector type	LC/PC
Optical port attributes	Depend on the optical module used
Standards compliance	IEEE802.3ae
Working mode	GE/10GE auto-sensing

40GE QSFP+ optical port

A 40GE QSFP+ optical port sends and receives service traffic at 40 Gbit/s. **Table 4-229** describes the attributes of a QSFP+ optical port.

Table 4-229 Attributes of a QSFP+ optical port

Attribute	Description
Connector type	MPO/LC
Optical port attributes	Depend on the optical module used
Standards compliance	IEEE802.3ba

Console port

The console port is connected to a console for on-site configuration. The port must use a **console cable**. The console port is used when a switch is powered on for the first time. For details about the attributes of a console port, see **Table 4-230**.

Table 4-230 Attributes of a console port

Attribute	Description
Connector type	RJ45
Standards compliance	RS-232
Working mode	Duplex Universal Asynchronous Receiver/Transmitter (UART)
Baud rate	9600 bit/s, 19200 bit/s, 38400 bit/s, 57600 bit/s, or 115200 bit/s Default value: 9600 bit/s

ETH management port

You can connect a switch to a configuration terminal or network management workstation through the ETH management port to configure the switch locally or remotely. The port must use an **Ethernet cable**. You can choose to download the software package through the ETH management port in the BootLoad menu. File transfer through the ETH management port is faster than transfer through the console port. **Table 4-231** describes the attributes of an ETH management port.

Table 4-231 Attributes of an ETH management port

Attribute	Description
Connector type	RJ45
Standards compliance	IEEE802.3

Attribute	Description
Working Mode	10/100 Mbit/s auto-sensing
Maximum transmission distance	100 m

In V200R012C00 and later versions, you can log in to the switch that contains the ETH management port for the first time through the ETH port. For details, see "First Login to a Switch" in the *Configuration Guide - Basic Configuration*. If you have logged in to the switch for the first time by pressing and holding the MODE button for 6 seconds or longer and saved the configuration, the default configuration on the ETH port will be cleared. In this case, you cannot log in to the switch for the first time through the ETH port. You are advised to log in to the switch for the first time through the ETH port.

USB port

The USB port can have a USB flash drive connected to upgrade the switch, or transfer configuration files or other files. The USB port can only connect to a USB flash drive that complies with USB 2.0.

NOTE

USB flash drives from different vendors differ in model compatibility and drivers. If a USB flash drive cannot be used, try to replace it with another one from a mainstream vendor. Switches support a maximum of 128 GB USB flash drives.

Indicator Description

Figure 4-95 Indicators on the S6730-S24X6Q

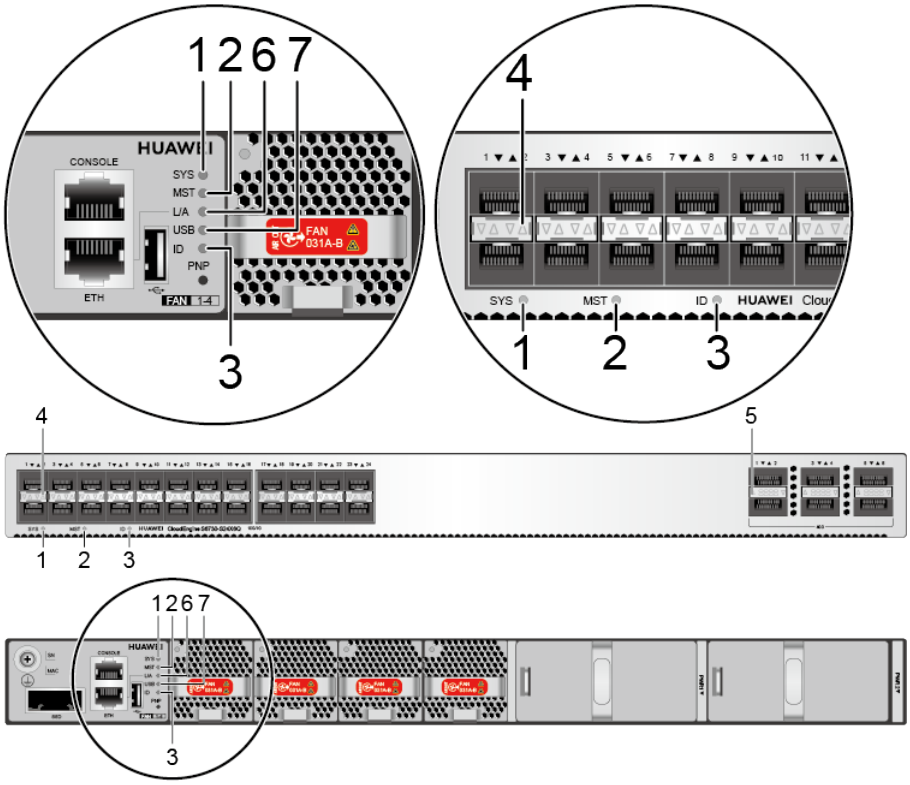

Table 4-232 Description of indicators on the switch

No.	Indicator	Name	Color	Status	Description
1	SYS	System status indicator	-	Off	The system is not running.
			Green	Fast blinking	The system is starting.
			Green	Steady on	During the system startup preparation phase, the SYS indicator is steady green, which lasts for a maximum of 30 seconds.
			Green	Slow blinking	The system is running normally.
			Red	Steady on	The system does not work normally after registration, or a fan alarm or a temperature alarm has been generated.

No.	Indicator	Name	Color	Status	Description
2	MST	Stack indicator	-	Off	The switch is not the master switch in a stack.
			Green	Steady on	The switch is the master switch in a stack or a standalone switch.
3	ID	ID indicator	-	Off	The ID indicator is not used (default state).
			Blue	Steady on	The indicator identifies the switch to maintain. The ID indicator can be turned on or off remotely to help field engineers find the switch to maintain.
4	-	Service port indicator (10GE optical port)	-	Off	The port is not connected or has been shut down.
			Green	Steady on	A link has been established on the port.
			-	Off	The port is not sending or receiving data.
			Yellow	Blinking	The port is sending or receiving data.
5	-	Service port indicator (40GE optical port)	-	Off	The port is not connected or has been shut down.
			Green	Steady on	A link has been established on the port.
				Blinking	The port is sending or receiving data.
6	L/A	ETH port indicator	-	Off	The ETH port is not connected.
			Green	Steady on	The ETH port is connected.
			Green	Blinking	The Eth port is sending or receiving data.

No.	Indicator	Name	Color	Status	Description
7	USB	USB-based deployment indicator	-	Off	• No USB flash drive is connected to the switch. • The USB port is damaged. • The indicator is damaged. • The USB flash drive does not have any configuration file and cannot be used for deployment. • The switch has been upgraded using the USB flash drive and is restarting.
			Green	Steady on	A USB-based deployment has been completed.
			Green	Blinking	The system is reading data from a USB flash drive.
			Yellow	Steady on	The switch has copied all the required files and completed the file check. The USB flash drive can be removed from the switch.
			Red	Blinking	An error has occurred when the system is executing the configuration file or reading data from the USB flash drive.

Power Supply Configuration

The switch can use a single power module or double power modules for 1+1 power redundancy. Pluggable AC and DC power modules can be used together in the same switch.

Heat Dissipation

The S6730-S24X6Q uses pluggable fan modules for forced air cooling. Air flows in from the front side and exhausts from the rear panel.

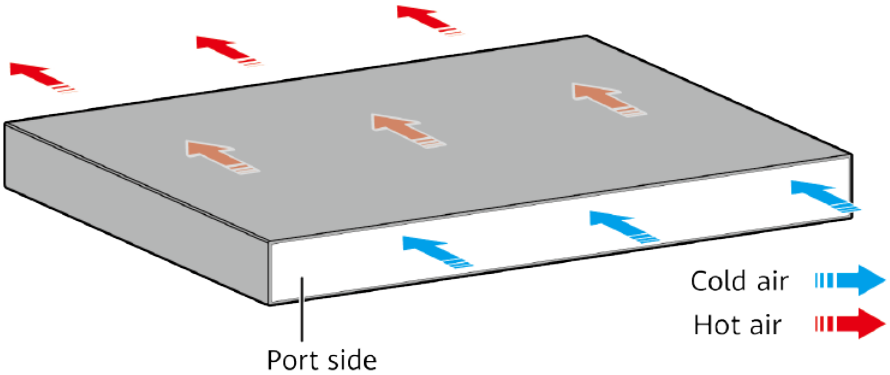

NOTE

This figure only shows the airflow direction and does not depict the actual device.

Technical Specifications

Table 4-233 lists technical specifications of the S6730-S24X6Q.

Table 4-233 Technical specifications

Item	Description
Memory (RAM)	4 GB
Flash	2 GB in total. To view the available flash memory size, run the **display version** command.
Mean time between failures (MTBF)	62.27 years
Mean time to repair (MTTR)	2 hours
Availability	> 0.99999
Service port surge protection	N/A
Power supply surge protection	• Using AC power modules: ±6 kV in differential mode, ±6 kV in common mode • Using DC power modules: ±2 kV in differential mode, ±4 kV in common mode
Dimensions (H x W x D)	• Basic dimensions (excluding the parts protruding from the body): 43.6 mm x 442.0 mm x 420.0 mm (1.72 in. x 17.4 in. x 16.5 in.) • Maximum dimensions (the depth is the distance from ports on the front panel to the handle on the rear panel): 43.6 mm x 442.0 mm x 446.0 mm (1.72 in. x 17.4 in. x 17.6 in.)
Weight (with packaging)	8.9 kg (19.62 lb)
Stack ports	• Any 10GE SFP+ ports (a maximum of 16 physical ports) • Any 40GE QSFP+ ports (a maximum of 6 physical ports)
RTC	Supported
RPS	Not supported
PoE	Not supported

Item	Description
Rated voltage range	• AC input: 100 V AC to 240 V AC, 50/60 Hz • High-Voltage DC input: 240 V DC • DC input: -48 V DC to -60 V DC
Maximum voltage range	• AC input: 90 V AC to 290 V AC, 45 Hz to 65 Hz • High-Voltage DC input: 190 V DC to 290 V DC • DC input: -38.4 V DC to -72 V DC
Maximum power consumption (100% throughput, full speed of fans)	249 W
Typical power consumption (30% of traffic load, tested according to ATIS standard)	135 W
Operating temperature	-5°C to +45°C (23°F to 113°F) at an altitude of 0-1800 m (0-5906 ft.) **NOTE** When the altitude is 1800-5000 m (5906-16404 ft.), the highest operating temperature reduces by 1°C (1.8°F) every time the altitude increases by 220 m (722 ft.). The switch cannot be started when the ambient temperature is lower than 0°C (32°F).
Storage temperature	-40°C to +70°C (-40°F to +158°F)
Noise under normal temperature (27°C, sound power)	< 65 dB(A)
Relative humidity	5% to 95%, noncondensing
Operating altitude	0-5000 m (0-16404 ft.)
Certification	• EMC certification • Safety certification • Manufacturing certification

Item	Description
Part number	02353AJW 02353AJW-001 02353AJW-003 02353AJW-004

4.14 S6730S-S

4.14.1 S6730S-S24X6Q-A (02353AJX/02353AJX-001/02353AJX-003/02353AJX-004)

Version Mapping

Table 4-234 lists the mapping between the S6730S-S24X6Q-A chassis and software versions.

Table 4-234 Version mapping

Series	Model	Software Version
S6730S-S	S6730S-S24X6Q-A	02353AJX: V200R019C00 and later versions 02353AJX-001: V200R020C10 and later versions 02353AJX-003: V200R021C10SPC500 and later versions (If V200R021C00SPC100 is used, install V200R021SPH011 or a later patch.) 02353AJX-004: V200R021C10SPC600 and later versions (If V200R021C00SPC100 is used, install V200R021SPH013 or a later patch.) **NOTE** V200R021C01 is not supported.

Appearance and Structure

Figure 4-96 S6730S-S24X6Q-A appearance

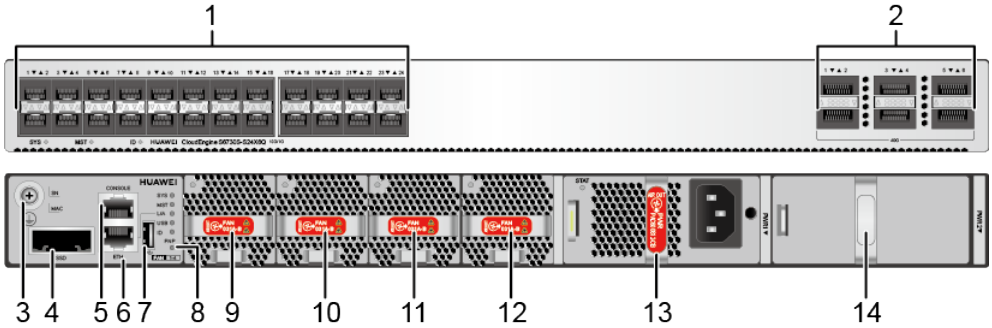

1	Twenty-four 10GE SFP+ ports Applicable modules and cables: • **GE optical module** • **GE-CWDM optical module** • **GE-DWDM optical module** • **GE copper module** • **10GE SFP+ optical module (OSXD22N00 not supported)** • **10GE-CWDM optical module** • **10GE-DWDM optical module** • **1 m, 3 m, 5 m, and 10 m SFP+ high-speed copper cables** • **3 m and 10 m SFP+ AOC cables** • **0.5 m and 1.5 m SFP+ dedicated stack cables (supported by the last 16 SFP+ ports and used only for zero-configuration stacking)**	2	Six 40GE QSFP+ optical ports Applicable modules and cables: • **QSFP+ optical module** • **1 m, 3 m, and 5 m QSFP+ to QSFP+ high-speed copper cables** • **10 m QSFP+ to QSFP+ AOC cable** • **2 m QSFP28 dedicated stack cable (supported in V200R020C10 and later versions)** **NOTE** A QSFP+ optical port cannot be split into four 10GE ports.
3	Ground screw **NOTE** It is used with a **ground cable**.	4	SSD card slot **NOTE** This slot is reserved for future use.
5	One console port	6	One ETH management port

7	One USB port	8	One PNP button **NOTICE** To restore the factory settings and reset the switch, hold down the button for at least 6 seconds. To reset the switch, press the button. Resetting the switch will cause service interruption. Exercise caution when you press the PNP button.
9	Fan module slot 1 **NOTE** Applicable fan module: **6.4 FAN-031A-B (Fan box(B,FAN panel side exhaust))**	10	Fan module slot 2 **NOTE** Applicable fan module: **6.4 FAN-031A-B (Fan box(B,FAN panel side exhaust))**
11	Fan module slot 3 **NOTE** Applicable fan module: **6.4 FAN-031A-B (Fan box(B,FAN panel side exhaust))**	12	Fan module slot 4 **NOTE** Applicable fan module: **6.4 FAN-031A-B (Fan box(B,FAN panel side exhaust))**
13	Power module slot 1 **NOTE** Applicable power module: • **5.16 PAC600S12-CB (600 W AC Power Module)** • **5.18 PAC600S12-EB (600 W AC Power Module)** • **5.17 PAC600S12-DB (600 W AC Power Module)** (applicable in V200R020C10 and later versions) • **5.19 PDC1000S12-DB (1000 W DC Power Module)**	14	Power module slot 2 **NOTE** Applicable power module: • **5.16 PAC600S12-CB (600 W AC Power Module)** • **5.18 PAC600S12-EB (600 W AC Power Module)** • **5.17 PAC600S12-DB (600 W AC Power Module)** (applicable in V200R020C10 and later versions) • **5.19 PDC1000S12-DB (1000 W DC Power Module)**

Port Description

10GE SFP+ optical port

A 10GE SFP+ Ethernet optical port supports auto-sensing to 1000 Mbit/s. It sends and receives service data at 1000 Mbit/s or 10 Gbit/s. **Table 4-235** describes the attributes of a 10GE SFP+ Ethernet optical port.

Table 4-235 Attributes of a 10GE SFP+ port

Attribute	Description
Connector type	LC/PC

Attribute	Description
Optical port attributes	Depend on the optical module used
Standards compliance	IEEE802.3ae
Working mode	GE/10GE auto-sensing

40GE QSFP+ optical port

A 40GE QSFP+ optical port sends and receives service traffic at 40 Gbit/s. **Table 4-236** describes the attributes of a QSFP+ optical port.

Table 4-236 Attributes of a QSFP+ optical port

Attribute	Description
Connector type	MPO/LC
Optical port attributes	Depend on the optical module used
Standards compliance	IEEE802.3ba

Console port

The console port is connected to a console for on-site configuration. The port must use a **console cable**. The console port is used when a switch is powered on for the first time. For details about the attributes of a console port, see **Table 4-237**.

Table 4-237 Attributes of a console port

Attribute	Description
Connector type	RJ45
Standards compliance	RS-232
Working mode	Duplex Universal Asynchronous Receiver/Transmitter (UART)
Baud rate	9600 bit/s, 19200 bit/s, 38400 bit/s, 57600 bit/s, or 115200 bit/s Default value: 9600 bit/s

ETH management port

You can connect a switch to a configuration terminal or network management workstation through the ETH management port to configure the switch locally or remotely. The port must use an **Ethernet cable**. You can choose to download the software package through the ETH management port in the BootLoad menu. File transfer through the ETH management port is faster than transfer through the console port. **Table 4-238** describes the attributes of an ETH management port.

Table 4-238 Attributes of an ETH management port

Attribute	Description
Connector type	RJ45
Standards compliance	IEEE802.3
Working Mode	10/100 Mbit/s auto-sensing
Maximum transmission distance	100 m

In V200R012C00 and later versions, you can log in to the switch that contains the ETH management port for the first time through the ETH port. For details, see "First Login to a Switch" in the *Configuration Guide - Basic Configuration*. If you have logged in to the switch for the first time by pressing and holding the MODE button for 6 seconds or longer and saved the configuration, the default configuration on the ETH port will be cleared. In this case, you cannot log in to the switch for the first time through the ETH port. You are advised to log in to the switch for the first time through the ETH port.

USB port

The USB port can have a USB flash drive connected to upgrade the switch, or transfer configuration files or other files. The USB port can only connect to a USB flash drive that complies with USB 2.0.

NOTE

USB flash drives from different vendors differ in model compatibility and drivers. If a USB flash drive cannot be used, try to replace it with another one from a mainstream vendor. Switches support a maximum of 128 GB USB flash drives.

Indicator Description

Figure 4-97 Indicators on the S6730S-S24X6Q-A

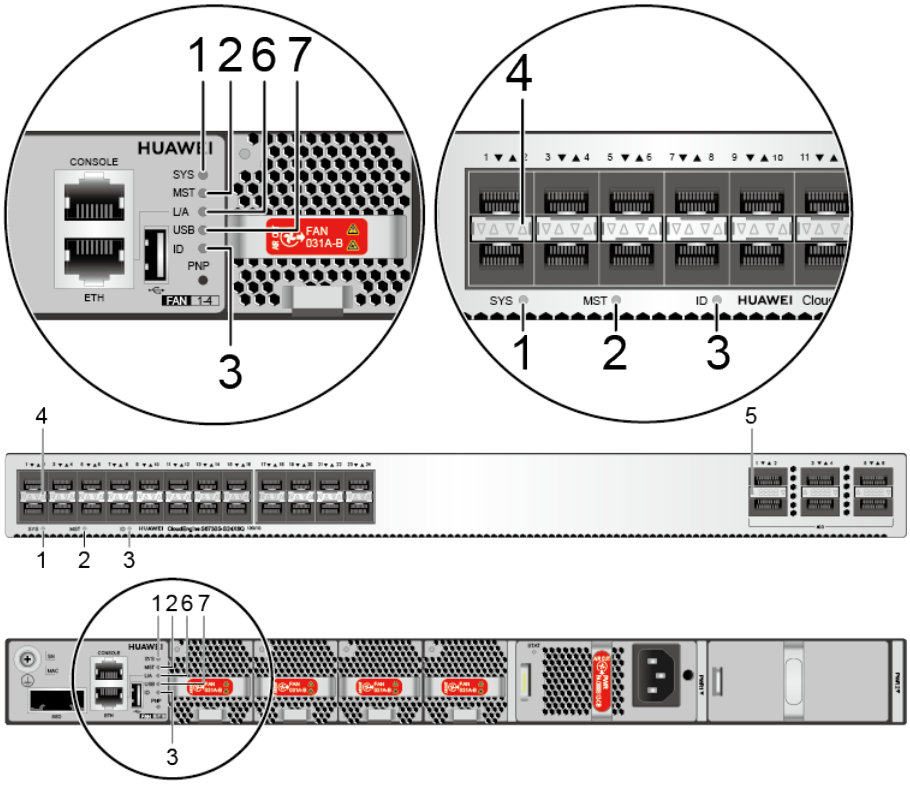

Table 4-239 Description of indicators on the switch

No.	Indicator	Name	Color	Status	Description
1	SYS	System status indicator	-	Off	The system is not running.
			Green	Fast blinking	The system is starting.
			Green	Steady on	During the system startup preparation phase, the SYS indicator is steady green, which lasts for a maximum of 30 seconds.
			Green	Slow blinking	The system is running normally.
			Red	Steady on	The system does not work normally after registration, or a fan alarm or a temperature alarm has been generated.

No.	Indicator	Name	Color	Status	Description
2	MST	Stack indicator	-	Off	The switch is not the master switch in a stack.
			Green	Steady on	The switch is the master switch in a stack or a standalone switch.
3	ID	ID indicator	-	Off	The ID indicator is not used (default state).
			Blue	Steady on	The indicator identifies the switch to maintain. The ID indicator can be turned on or off remotely to help field engineers find the switch to maintain.
4	-	Service port indicator (10GE optical port)	-	Off	The port is not connected or has been shut down.
			Green	Steady on	A link has been established on the port.
			-	Off	The port is not sending or receiving data.
			Yellow	Blinking	The port is sending or receiving data.
5	-	Service port indicator (40GE optical port)	-	Off	The port is not connected or has been shut down.
			Green	Steady on	A link has been established on the port.
				Blinking	The port is sending or receiving data.
6	L/A	ETH port indicator	-	Off	The ETH port is not connected.
			Green	Steady on	The ETH port is connected.
			Green	Blinking	The Eth port is sending or receiving data.

No.	Indicator	Name	Color	Status	Description
7	USB	USB-based deployment indicator	-	Off	• No USB flash drive is connected to the switch. • The USB port is damaged. • The indicator is damaged. • The USB flash drive does not have any configuration file and cannot be used for deployment. • The switch has been upgraded using the USB flash drive and is restarting.
			Green	Steady on	A USB-based deployment has been completed.
			Green	Blinking	The system is reading data from a USB flash drive.
			Yellow	Steady on	The switch has copied all the required files and completed the file check. The USB flash drive can be removed from the switch.
			Red	Blinking	An error has occurred when the system is executing the configuration file or reading data from the USB flash drive.

Power Supply Configuration

The switch can use a single power module or double power modules for 1+1 power redundancy. Pluggable AC and DC power modules can be used together in the same switch.

Heat Dissipation

The S6730S-S24X6Q-A uses pluggable fan modules for forced air cooling. Air flows in from the front side and exhausts from the rear panel.

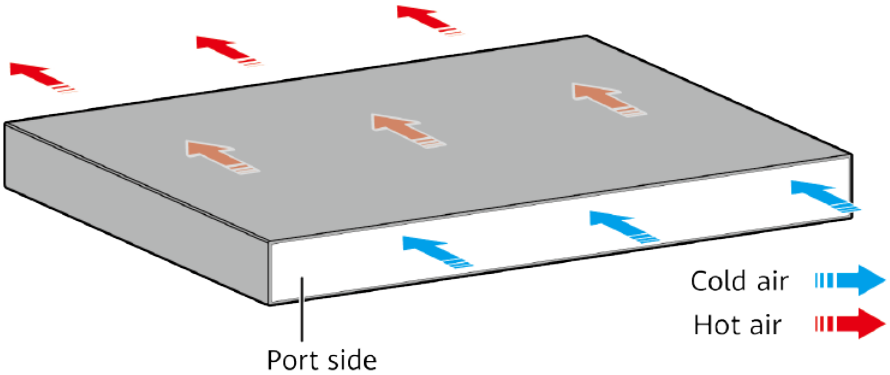

NOTE

This figure only shows the airflow direction and does not depict the actual device.

Technical Specifications

Table 4-240 lists technical specifications of the S6730S-S24X6Q-A.

Table 4-240 Technical specifications

Item	Description
Memory (RAM)	4 GB
Flash	2 GB in total. To view the available flash memory size, run the **display version** command.
Mean time between failures (MTBF)	62.27 years
Mean time to repair (MTTR)	2 hours
Availability	> 0.99999
Service port surge protection	N/A
Power supply surge protection	• Using AC power modules: ±6 kV in differential mode, ±6 kV in common mode • Using DC power modules: ±2 kV in differential mode, ±4 kV in common mode
Dimensions (H x W x D)	• Basic dimensions (excluding the parts protruding from the body): 43.6 mm x 442.0 mm x 420.0 mm (1.72 in. x 17.4 in. x 16.5 in.) • Maximum dimensions (the depth is the distance from ports on the front panel to the handle on the rear panel): 43.6 mm x 442.0 mm x 446.0 mm (1.72 in. x 17.4 in. x 17.6 in.)
Weight (with packaging)	9.84 kg (21.69 lb)
Stack ports	• Any 10GE SFP+ ports (a maximum of 16 physical ports) • Any 40GE QSFP+ ports (a maximum of 6 physical ports)
RTC	Supported
RPS	Not supported
PoE	Not supported

Item	Description
Rated voltage range	• AC input: 100 V AC to 240 V AC, 50/60 Hz • High-Voltage DC input: 240 V DC • DC input: -48 V DC to -60 V DC
Maximum voltage range	• AC input: 90 V AC to 290 V AC, 45 Hz to 65 Hz • High-Voltage DC input: 190 V DC to 290 V DC • DC input: -38.4 V DC to -72 V DC
Maximum power consumption (100% throughput, full speed of fans)	249 W
Typical power consumption (30% of traffic load, tested according to ATIS standard)	135 W
Operating temperature	-5°C to +45°C (23°F to 113°F) at an altitude of 0-1800 m (0-5906 ft.) **NOTE** When the altitude is 1800-5000 m (5906-16404 ft.), the highest operating temperature reduces by 1°C (1.8°F) every time the altitude increases by 220 m (722 ft.). The switch cannot be started when the ambient temperature is lower than 0°C (32°F).
Storage temperature	-40°C to +70°C (-40°F to +158°F)
Noise under normal temperature (27°C, sound power)	< 65 dB(A)
Relative humidity	5% to 95%, noncondensing
Operating altitude	0-5000 m (0-16404 ft.)
Certification	• EMC certification • Safety certification • Manufacturing certification

Item	Description
Part number	02353AJX 02353AJX-001 02353AJX-003 02353AJX-004

4.15 S6730S-H

4.15.1 S6730S-H24X6C-A (02353HVK/02353HVK-001/02353HVK-003/02353HVK-004)

Version Mapping

Table 4-241 lists the mapping between the S6730S-H24X6C-A chassis and software versions.

Table 4-241 Version mapping

Series	Model	Software Version
S6730S-H	S6730S-H24X6C-A	02353HVK: V200R019C10 and later versions 02353HVK-001: V200R020C10 and later versions 02353HVK-003: V200R021C10SPC500 and later versions (If V200R021C00SPC100 is used, install V200R021SPH011 or a later patch.) 02353HVK-004: V200R021C10SPC600 and later versions (If V200R021C00SPC100 is used, install V200R021SPH013 or a later patch.) **NOTE** V200R021C01 is not supported.

Appearance and Structure

Figure 4-98 S6730S-H24X6C-A appearance

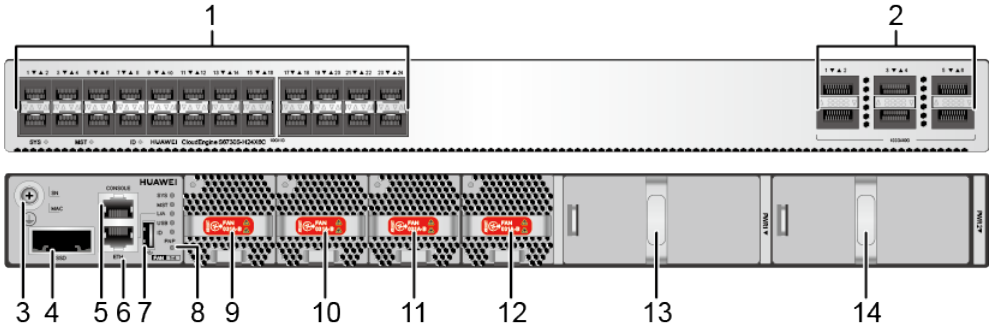

1	Twenty-four 10GE SFP+ ports Applicable modules and cables: • **GE optical module** • **GE-CWDM optical module** • **GE-DWDM optical module** • **GE copper module** • **10GE SFP+ optical module (OSXD22N00 not supported)** • **10GE-CWDM optical module** • **10GE-DWDM optical module** • **1 m, 3 m, 5 m, and 10 m SFP+ high-speed copper cables** • **3 m and 10 m SFP+ AOC cables** • **0.5 m and 1.5 m SFP+ dedicated stack cables (supported by the last 16 SFP+ ports and used only for zero-configuration stacking)**	2	Six 40GE/100GE QSFP28 optical ports Applicable modules and cables: • **QSFP+ optical module** • **QSFP28 optical module** • **1 m, 3 m, and 5 m QSFP+ to QSFP+ high-speed copper cables** • **10 m QSFP+ to QSFP+ AOC cable** • **1 m QSFP28 to QSFP28 high-speed copper cable** • **10 m QSFP28 to QSFP28 AOC cable** • **2 m QSFP28 dedicated stack cable (supported in V200R020C10 and later versions)** **NOTE** A QSFP28 optical port cannot be split into four 10GE ports, regardless of whether the port uses a QSFP28 or QSFP+ optical module. The default rate is 100 Gbit/s.
3	Ground screw **NOTE** It is used with a **ground cable**.	4	SSD card slot **NOTE** This slot is reserved for future use.
5	One console port	6	One ETH management port

7	One USB port	8	One PNP button **NOTICE** To restore the factory settings and reset the switch, hold down the button for at least 6 seconds. To reset the switch, press the button. Resetting the switch will cause service interruption. Exercise caution when you press the PNP button.
9	Fan module slot 1 **NOTE** Applicable fan module: **6.4 FAN-031A-B (Fan box(B,FAN panel side exhaust))**	10	Fan module slot 2 **NOTE** Applicable fan module: **6.4 FAN-031A-B (Fan box(B,FAN panel side exhaust))**
11	Fan module slot 3 **NOTE** Applicable fan module: **6.4 FAN-031A-B (Fan box(B,FAN panel side exhaust))**	12	Fan module slot 4 **NOTE** Applicable fan module: **6.4 FAN-031A-B (Fan box(B,FAN panel side exhaust))**
13	Power module slot 1 **NOTE** Applicable power module: • **5.16 PAC600S12-CB (600 W AC Power Module)** • **5.18 PAC600S12-EB (600 W AC Power Module)** • **5.17 PAC600S12-DB (600 W AC Power Module)** (applicable in V200R020C10 and later versions) • **5.19 PDC1000S12-DB (1000 W DC Power Module)**	14	Power module slot 2 **NOTE** Applicable power module: • **5.16 PAC600S12-CB (600 W AC Power Module)** • **5.18 PAC600S12-EB (600 W AC Power Module)** • **5.17 PAC600S12-DB (600 W AC Power Module)** (applicable in V200R020C10 and later versions) • **5.19 PDC1000S12-DB (1000 W DC Power Module)**

Port Description

10GE SFP+ optical port

A 10GE SFP+ Ethernet optical port supports auto-sensing to 1000 Mbit/s. It sends and receives service data at 1000 Mbit/s or 10 Gbit/s. **Table 4-242** describes the attributes of a 10GE SFP+ Ethernet optical port.

Table 4-242 Attributes of a 10GE SFP+ port

Attribute	Description
Connector type	LC/PC

Attribute	Description
Optical port attributes	Depend on the optical module used
Standards compliance	IEEE802.3ae
Working mode	GE/10GE auto-sensing

40GE/100GE QSFP28 optical port

A 40GE/100GE QSFP28 optical port sends and receives service traffic at 40 Gbit/s or 100 Gbit/s. **Table 4-243** describes the attributes of a QSFP28 optical port.

Table 4-243 Attributes of a QSFP28 optical port

Attribute	Description
Connector type	MPO/LC
Optical port attributes	Depend on the optical module used
Standards compliance	IEEE802.3ba

Console port

The console port is connected to a console for on-site configuration. The port must use a **console cable**. The console port is used when a switch is powered on for the first time. For details about the attributes of a console port, see **Table 4-244**.

Table 4-244 Attributes of a console port

Attribute	Description
Connector type	RJ45
Standards compliance	RS-232
Working mode	Duplex Universal Asynchronous Receiver/Transmitter (UART)
Baud rate	9600 bit/s, 19200 bit/s, 38400 bit/s, 57600 bit/s, or 115200 bit/s Default value: 9600 bit/s

ETH management port

You can connect a switch to a configuration terminal or network management workstation through the ETH management port to configure the switch locally or remotely. The port must use an **Ethernet cable**. You can choose to download the software package through the ETH management port in the BootLoad menu. File transfer through the ETH management port is faster than transfer through the console port. **Table 4-245** describes the attributes of an ETH management port.

Table 4-245 Attributes of an ETH management port

Attribute	Description
Connector type	RJ45
Standards compliance	IEEE802.3
Working Mode	10/100 Mbit/s auto-sensing
Maximum transmission distance	100 m

In V200R012C00 and later versions, you can log in to the switch that contains the ETH management port for the first time through the ETH port. For details, see "First Login to a Switch" in the *Configuration Guide - Basic Configuration*. If you have logged in to the switch for the first time by pressing and holding the MODE button for 6 seconds or longer and saved the configuration, the default configuration on the ETH port will be cleared. In this case, you cannot log in to the switch for the first time through the ETH port. You are advised to log in to the switch for the first time through the ETH port.

USB port

The USB port can have a USB flash drive connected to upgrade the switch, or transfer configuration files or other files. The USB port can only connect to a USB flash drive that complies with USB 2.0.

NOTE

USB flash drives from different vendors differ in model compatibility and drivers. If a USB flash drive cannot be used, try to replace it with another one from a mainstream vendor. Switches support a maximum of 128 GB USB flash drives.

Indicator Description

The S6730S-H24X6C-A has the same types of indicators as the S6730-H48X6C. For details, see **Indicator Description**.

Power Supply Configuration

The switch can use a single power module or double power modules for 1+1 power redundancy. Pluggable AC and DC power modules can be used together in the same switch.

Heat Dissipation

The S6730S-H24X6C-A uses pluggable fan modules for forced air cooling. Air flows in from the front side and exhausts from the rear panel.

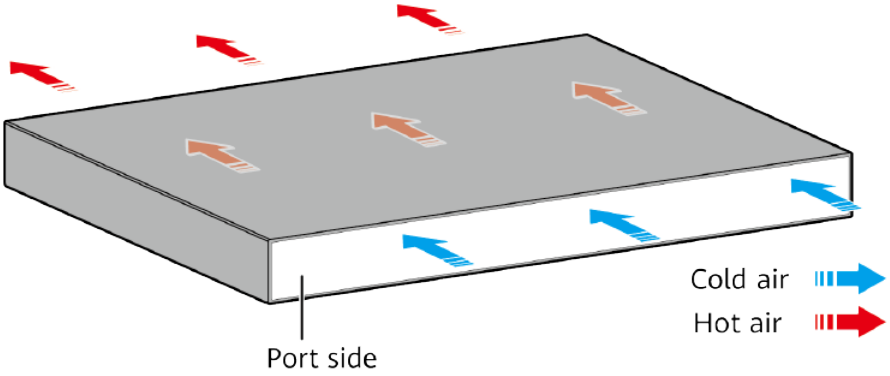

NOTE

This figure only shows the airflow direction and does not depict the actual device.

Technical Specifications

Table 4-246 lists technical specifications of the S6730S-H24X6C-A.

Table 4-246 Technical specifications

Item	Description
Memory (RAM)	4 GB
Flash	2 GB in total. To view the available flash memory size, run the **display version** command.
Mean time between failures (MTBF)	62.27 years
Mean time to repair (MTTR)	2 hours
Availability	> 0.99999
Service port surge protection	N/A
Power supply surge protection	• Using AC power modules: ±6 kV in differential mode, ±6 kV in common mode • Using DC power modules: ±2 kV in differential mode, ±4 kV in common mode

Item	Description
Dimensions (H x W x D)	• Basic dimensions (excluding the parts protruding from the body): 43.6 mm x 442.0 mm x 420.0 mm (1.72 in. x 17.4 in. x 16.5 in.) • Maximum dimensions (the depth is the distance from ports on the front panel to the handle on the rear panel): 43.6 mm x 442.0 mm x 446.0 mm (1.72 in. x 17.4 in. x 17.6 in.)
Weight (with packaging)	9.84 kg (21.69 lb)
Stack ports	• Any 10GE SFP+ ports (a maximum of 16 physical ports) • Any 40GE/100GE QSFP28 ports (a maximum of 6 physical ports)
RTC	Supported
RPS	Not supported
PoE	Not supported
Rated voltage range	• AC input: 100 V AC to 240 V AC, 50/60 Hz • High-Voltage DC input: 240 V DC • DC input: -48 V DC to -60 V DC
Maximum voltage range	• AC input: 90 V AC to 290 V AC, 45 Hz to 65 Hz • High-Voltage DC input: 190 V DC to 290 V DC • DC input: -38.4 V DC to -72 V DC
Maximum power consumption (100% throughput, full speed of fans)	254 W
Typical power consumption (30% of traffic load, tested according to ATIS standard)	149 W
Operating temperature	-5°C to +45°C (23°F to 113°F) at an altitude of 0-1800 m (0-5906 ft.) **NOTE** When the altitude is 1800-5000 m (5906-16404 ft.), the highest operating temperature reduces by 1°C (1.8°F) every time the altitude increases by 220 m (722 ft.). The switch cannot be started when the ambient temperature is lower than 0°C (32°F). The operating temperature of the switch is -5°C to 40°C (23°F to 104°F) when it uses QSFP-100G-ER4 optical module.

Item	Description
Storage temperature	-40°C to +70°C (-40°F to +158°F)
Noise under normal temperature (27°C, sound power)	< 65 dB(A)
Relative humidity	5% to 95%, noncondensing
Operating altitude	0-5000 m (0-16404 ft.)
Certification	• EMC certification • Safety certification • Manufacturing certification
Part number	02353HVK 02353HVK-001 02353HVK-003 02353HVK-004

